Le Gruyère AOP European Curling Championships 2021
Lillehammer, Norway

20 – 27 November 2021

RESULTS BOOK

B-Division Men

Medallists

Medal	Country	Name	Position - Function
GOLD	TUR - Turkey	KARAGOZ Ugurcan	4 S
		KARAKURT Oguzhan	3 V
		UCAN Muhammed Zeki	2
		YUCE Orhun	1
		DEMIREL Muhammet Haydar	A
		CELIK Ahmet	C
SILVER	RUS - Russia	GLUKHOV Sergey	4 S
		KLIMOV Evgenii	3
		MIRONOV Dmitrii	2 V
		KALALB Anton	1
		GORYACHEV Daniil	A
		KOZYREV Aleksandr	C
BRONZE	ESP - Spain	VEZ Sergio	4 S
		GOMEZ Luis	3
		DE PAZ Eduardo	2
		SHAW Nicholas	1 V
		GARCIA Angel	A

Note:
Position and function for each team member:
4 = Fourth, **3** = Third, **2** = Second, **1** = Lead, **A** = Alternate, **S** = Skip, **V** = Vice-Skip, **C** = Coach

Final Standings

Rank	Team	Players	Position - Function	Group Rank	DSC
1	TUR - Turkey	KARAGOZ Ugurcan	4 S		>A
		KARAKURT Oguzhan	3 V		
		UCAN Muhammed Zeki	2		
		YUCE Orhun	1		
		DEMIREL Muhammet Haydar	A		
		CELIK Ahmet	C		
2	RUS - Russia	GLUKHOV Sergey	4 S		>A
		KLIMOV Evgenii	3		
		MIRONOV Dmitrii	2 V		
		KALALB Anton	1		
		GORYACHEV Daniil	A		
		KOZYREV Aleksandr	C		
3	ESP - Spain	VEZ Sergio	4 S		
		GOMEZ Luis	3		
		DE PAZ Eduardo	2		
		SHAW Nicholas	1 V		
		GARCIA Angel	A		
		-	C		
4	LAT - Latvia	TRUKSANS Martins	4 S		
		KLIVE Janis	3 V		
		AVOTINS Aivars	2		
		BUHOLCS Sandris	1		
		BUNCIS Roberts Reinis	A		
		SMILGA Karlis	C		
5	AUT - Austria	GENNER Mathias	4 S		
		BACKOFEN Jonas	3 V		
		REICHEL Martin	2		
		KIRCHMAIR Lukas	1		
		HOFER Matthaeus	A		
		SCHROEDER Bjoern	C		
5	WAL - Wales	POUGHER James	4 S		
		PHILLIPS Rhys	3		
		COOMBS Garry	2 V		
		POUGHER Simon	1		
		LLOYD Martin	A		
		FLETCHER Jamie	C		
7	ENG - England	WOOLSTON Andrew	4 S	A4	54.15 cm
		REED Andrew	3 V		
		GIBSON Scott	2		
		WHITTLE James	1		
		JAEGGI Thomas	A		
		-	C		

Final Standings

Rank	Team	Players	Position - Function	Group Rank	DSC
8	EST - Estonia	VLASSOV Mihhail	4 V	B4	59.57 cm
		VELTSMAN Eduard	3 S		
		KIZIRIDI Janis	2		
		DZENZELJUK Igor	1		
		DOTSENKO Konstantin	A		
		JAKOVLEV Vladimir	C		
9	HUN - Hungary	FOTI Balazs	4	B5	35.08 cm
		EZSOL Gabor	3 S		
		SZABAD Tamas	2 V		
		VARGA Balazs	1		
		VASPORI Tamas	A		
		VASPORI Tamas	C		
10	FRA - France	MORARD Quentin	4 V	A5	51.91 cm
		MERCIER Eddy	3 S		
		TUAZ Leo	2		
		GAUDIN Killian	1		
		VALVASSORI Yannick	A		
		MERCIER Thierry	C		
11	SVK - Slovakia	KAPRALIK Patrik	4 V	A6	76.28 cm
		POLAK Jakub	3		
		GALLO Juraj	2 S		
		PITONAK Peter	1		
		MASARYK Robert	A		
		-	C		
12	BEL - Belgium	SPRUYT Jeroen	4 V	B6	89.57 cm
		VERREYCKEN Timo	3 S		
		YSKOUT Daan	2		
		VAN LOOY Bram	1		
		-	A		
		NEELEMAN Wim	C		
13	BLR - Belarus	BARKAN Dmitriy	4 S	B7	69.79 cm
		RUDNITSKI Dzmitry	3		
		KRYSHTOPA Mikalai	2 V		
		CHUBAROV Aleksej	1		
		-	A		
		-	C		
14	SLO - Slovenia	CULIC Jure	4 S		
		URSIC Gasper	3		
		LAJOVEC Jost	2		
		VERBINC Gregor	1 V		
		TISLER Tomas	A		
		-	C		

Final Standings

Rank	Team	Players	Position - Function	Group Rank	DSC
15	LTU - Lithuania	RYKOV Konstantin	4 S		>C
		SKROLIS Arunas	3 V		
		KAMARAUSKAS Paulius	2		
		KIUDYS Donatas	1		
		IVANAUSKAS Nedas	A		
		ZALIECKAS Vygantas	C		
16	BUL - Bulgaria	SEILER Reto	4 S		>C
		MOMERIN Bojidar	3		
		GEORGIEV Stoil	2 V		
		PETROV Stanimir	1		
		RUNTOV Nikolay	A		
		RUNTOV Nikolay	C		

Note:
Final standings are based on play-off results and group standings. Losers of the qualification are ranked equal fifth. Teams involved in the relegation are ranked 13-16. The remaining teams are ranked according to their group rank and the Draw Shot Challenge (DSC).

Position and function for each team member:
4 = Fourth, **3** = Third, **2** = Second, **1** = Lead, **A** = Alternate, **S** = Skip, **V** = Vice-Skip, **C** = Coach

Legend:
>A To A-Division **>C** To C-Division

TUR and RUS are qualified for the World Qualification Event 2022 in Lohja, Finland

Competition Summary

Session	Date Time	Sheet F	Sheet G	Sheet H	Sheet J	Sheet K	Sheet L
Session 1	20 NOV 9:00	SLO 4 - 10 SVK					
Session 2	20 NOV 14:00	AUT 8 - 9 ENG	TUR 11 - 1 BUL	FRA 4 - 5 WAL	ESP 7 - 2 EST	BEL 3 - 7 HUN	LAT 7 - 4 BLR
Session 3	20 NOV 19:00						LTU 2 - 8 RUS
Session 4	21 NOV 9:00	EST 9 - 2 HUN	AUT 4 - 3 FRA	BUL 6 - 4 SVK	TUR 6 - 7 ENG	WAL 9 - 1 SLO	ESP 7 - 3 BEL
Session 6	21 NOV 19:00	BLR 4 - 10 RUS		LTU 8 - 4 LAT			
Session 8	22 NOV 12:00	TUR 10 - 7 WAL	RUS 8 - 4 LAT	HUN 6 - 7 ESP	BLR 8 - 5 LTU	FRA 6 - 4 SVK	BEL 6 - 9 EE EST
Session 9	22 NOV 16:00			SLO 8 - 5 BUL			
Session 10	22 NOV 20:00	LAT 7 - 1 BEL	WAL 4 - 9 AUT			RUS 11 - 3 EST	FRA 3 - 8 ENG
Session 11	23 NOV 9:00		ENG 5 - 9 SVK			TUR 8 - 3 FRA	SLO 3 - 7 AUT
Session 12	23 NOV 14:00		LTU 6 - 10 BEL	ESP 6 - 10 RUS	LAT 11 - 6 HUN	EST 9 - 6 BLR	BUL 3 - 7 WAL
Session 13	23 NOV 19:00					SVK 2 - 5 AUT	
Session 14	24 NOV 9:00	BUL 6 - 7 FRA	EST 8 - 6 LTU	BEL 9 - 1 BLR		ESP 8 - 3 LAT	RUS 9 - 3 HUN
Session 15	24 NOV 14:00			AUT 2 - 10 TUR	SVK 9 - 5 WAL		ENG 7 - 10 SLO
Session 16	24 NOV 19:00	LTU 4 - 11 ESP	HUN 8 - 5 BLR				
Session 17	25 NOV 9:00		SLO 3 - 6 TUR	WAL 9 - 4 ENG	AUT 8 - 3 BUL		
Session 18	25 NOV 14:00				BEL 6 - 9 RUS	HUN 11 - 8 EE LTU	
Session 19	25 NOV 19:00		BLR 6 - 10 ESP	LAT 8 - 7 EST	FRA 8 - 1 SLO	ENG 8 - 2 BUL	SVK 3 - 8 TUR
Qualification	26 NOV 10:00	AUT 4 - 8 LAT					ESP 8 - 4 WAL
Relegation 1	26 NOV 10:00		SLO 6 - 9 BLR			BUL 6 - 9 LTU	
Semi-finals	26 NOV 18:00		RUS 11 - 3 LAT			ESP 5 - 7 TUR	
Relegation 2	26 NOV 18:00			SLO 10 - 8 LTU			
Finals	27 NOV 11:30			RUS 3 - 4 EE TUR	LAT 9 - 12 EE ESP		

Standings after Round Robin

Group A

Rank	Team	Games	Wins	Losses		
1	TUR - Turkey	7	6	1	Q	
2	AUT - Austria	7	5	2	Q	
3	WAL - Wales	7	4	3	Q	w1
4	ENG - England	7	4	3		w0
5	FRA - France	7	3	4		w1
6	SVK - Slovakia	7	3	4		w0
7	SLO - Slovenia	7	2	5		
8	BUL - Bulgaria	7	1	6		

Group B

Rank	Team	Games	Wins	Losses		
1	RUS - Russia	7	7	0	Q	
2	ESP - Spain	7	6	1	Q	
3	LAT - Latvia	7	4	3	Q	w1
4	EST - Estonia	7	4	3		w0
5	HUN - Hungary	7	3	4		
6	BEL - Belgium	7	2	5		
7	BLR - Belarus	7	1	6		w1
8	LTU - Lithuania	7	1	6		w0

Competition Summary

Merged Group Standings

Rank	Team	Round Robin Results		
		Group	Rank	DSC
1	RUS - Russia	B	1	44.43cm
2	TUR - Turkey	A	1	62.48cm
3	ESP - Spain	B	2	41.58cm
4	AUT - Austria	A	2	49.81cm
5	WAL - Wales	A	3	40.88cm
6	LAT - Latvia	B	3	47.15cm
7	ENG - England	A	4	54.15cm
8	EST - Estonia	B	4	59.57cm
9	HUN - Hungary	B	5	35.08cm
10	FRA - France	A	5	51.91cm
11	SVK - Slovakia	A	6	76.28cm
12	BEL - Belgium	B	6	89.57cm
13	SLO - Slovenia	A	7	64.39cm
14	BLR - Belarus	B	7	69.79cm
15	LTU - Lithuania	B	8	63.37cm
16	BUL - Bulgaria	A	8	90.37cm

Play-offs Bracket

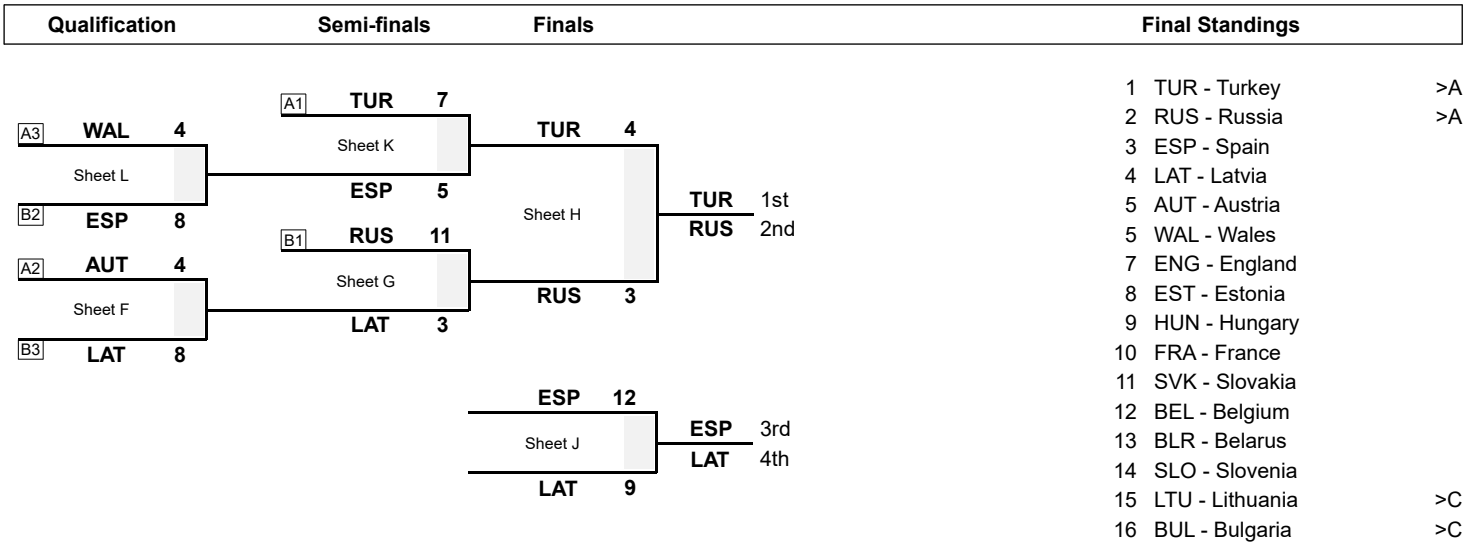

Relegation Bracket

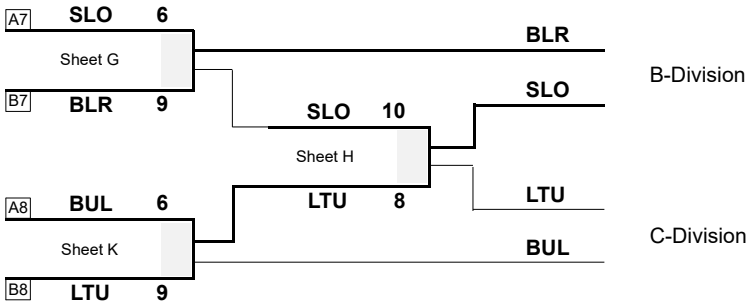

Legend:

>A	To A-Division	**>C**	To C-Division	**EE**	Extra End
Q	Qualified for the play-offs	**wn**	Number of wins (n) against tied teams		

TUR and RUS are qualified for the World Qualification Event 2022 in Lohja, Finland

ECC 2021
Lillehammer, Norway

SAT 27 NOV 2021
Start Time 11:30

Le Gruyère AOP European Curling Championships 2021
Lillehammer Youth Hall
B-Division Men

Finals

Session Results and Standings

Sheet	Game	Team	LSFE	1	2	3	4	5	6	7	8	9	10	Extra Ends			Total
H	9	RUS - Russia	*	0	1	0	1	0	0	0	0	0	1	0			3
	9	TUR - Turkey		0	0	2	0	0	0	0	1	0	0	1			4
J	10	LAT - Latvia		0	0	1	1	4	0	0	1	0	2	0			9
	10	ESP - Spain	*	0	4	0	0	0	2	1	0	2	0	3			12

Play-offs Bracket

Qualification | **Semi-finals** | **Finals**

A3 **WAL 4** — Sheet L — B2 **ESP 8**

A1 **TUR 7** — Sheet K — **ESP 5**

A2 **AUT 4** — Sheet F — B3 **LAT 8**

B1 **RUS 11** — Sheet G — **LAT 3**

TUR 4 — Sheet H — **RUS 3**

ESP 12 — Sheet J — **LAT 9**

TUR 1st
RUS 2nd

ESP 3rd
LAT 4th

Final Standings

1	TUR - Turkey	>A
2	RUS - Russia	>A
3	ESP - Spain	
4	LAT - Latvia	
5	AUT - Austria	
5	WAL - Wales	
7	ENG - England	
8	EST - Estonia	
9	HUN - Hungary	
10	FRA - France	
11	SVK - Slovakia	
12	BEL - Belgium	
13	BLR - Belarus	
14	SLO - Slovenia	
15	LTU - Lithuania	>C
16	BUL - Bulgaria	>C

Legend:
>A To A-Division **>C** To C-Division **LSFE(*)** Last Stone First End

TUR and RUS are qualified for the World Qualification Event 2022 in Lohja, Finland

ECC 2021
Lillehammer, Norway

SAT 27 NOV 2021
Start Time 11:30

Le Gruyère AOP European Curling Championships 2021
Lillehammer Youth Hall
B-Division Men

Gold Medal Game

Game Results

Sheet	Game	Team	LSFE	1	2	3	4	5	6	7	8	9	10	Extra Ends			Total
H	9	RUS - Russia	*	0	1	0	1	0	0	0	0	0	1	0			3
	9	TUR - Turkey		0	0	2	0	0	0	0	1	0	0	1			4

RUS - Russia		
4	S	GLUKHOV Sergey
3		KLIMOV Evgenii
2	V	MIRONOV Dmitrii
1		KALALB Anton
A		GORYACHEV Daniil

TUR - Turkey		
4	S	KARAGOZ Ugurcan
3	V	KARAKURT Oguzhan
2		UCAN Muhammed Zeki
1		YUCE Orhun
A		DEMIREL Muhammet Haydar

Note:
Position and function for each team member:
4 = Fourth, **3** = Third, **2** = Second, **1** = Lead, **A** = Alternate, **S** = Skip, **V** = Vice-Skip

Legend:
LSFE(*) Last Stone First End

ECC 2021
Lillehammer, Norway

SAT 27 NOV 2021
Start Time 11:30

Le Gruyère AOP European Curling Championships 2021
Lillehammer Youth Hall
B-Division Men

Bronze Medal Game

Game Results

Sheet	Game	Team	LSFE	1	2	3	4	5	6	7	8	9	10	Extra Ends			Total
J	10	LAT - Latvia		0	0	1	1	4	0	0	1	0	2	0			9
	10	ESP - Spain	*	0	4	0	0	0	2	1	0	2	0	3			12

LAT - Latvia		
4	S	TRUKSANS Martins
3	V	KLIVE Janis
2		AVOTINS Aivars
1		BUHOLCS Sandris
A		BUNCIS Roberts Reinis

ESP - Spain		
4	S	VEZ Sergio
3		GOMEZ Luis
2		DE PAZ Eduardo
1	V	SHAW Nicholas
A		GARCIA Angel

GARCIA A replaced GOMEZ L at the beginning of end 6
Revised line-up: (4 S) VEZ S, (3) DE PAZ E, (2) GARCIA A, (1 V) SHAW N

Note:
Position and function for each team member:
4 = Fourth, **3** = Third, **2** = Second, **1** = Lead, **A** = Alternate, **S** = Skip, **V** = Vice-Skip

Legend:
LSFE(*) Last Stone First End

Scoring Analysis

Team	Games		LSFE	Stolen Ends	Last Stone Eff.	Force Eff.	Points Scored 0	1	2	3	4	>4	Total	Plus / Minus
RUS	9	For	8	8	72%	68%	10	12	12	10	2	1	79	+44
		Against	1	0			6	17	6	2	0	0	35	
TUR	9	For	5	18	42%	77%	7	25	15	1	3	0	70	+36
		Against	4	5			6	20	7	0	0	0	34	
ESP	10	For	6	12	51%	63%	4	17	18	8	1	0	81	+27
		Against	4	5			9	23	7	3	2	0	54	
AUT	8	For	5	8	33%	68%	3	19	9	2	1	0	47	+5
		Against	3	7			9	19	8	1	1	0	42	
SVK	7	For	3	5	29%	58%	9	15	4	3	1	1	41	+2
		Against	4	9			3	20	6	1	1	0	39	
WAL	8	For	7	11	31%	42%	9	19	11	3	0	0	50	+2
		Against	1	7			4	10	11	4	1	0	48	
ENG	7	For	2	13	32%	48%	2	21	9	3	0	0	48	+1
		Against	5	5			4	12	9	3	2	0	47	
EST	7	For	4	5	41%	47%	6	13	6	6	1	0	47	+1
		Against	3	6			3	12	7	5	0	1	46	
FRA	7	For	3	4	26%	83%	7	11	3	3	2	0	34	-2
		Against	4	12			7	25	4	1	0	0	36	
LAT	10	For	2	15	26%	56%	2	30	12	2	1	0	64	-5
		Against	8	9			5	24	9	5	3	0	69	
BEL	7	For	2	9	27%	47%	6	17	6	3	0	0	38	-8
		Against	5	9			4	15	8	5	0	0	46	
HUN	7	For	6	5	31%	48%	3	15	8	4	0	0	43	-9
		Against	1	10			5	15	11	5	0	0	52	
LTU	9	For	5	10	30%	19%	4	23	13	1	1	0	56	-20
		Against	4	12			2	13	14	10	0	1	76	
BLR	8	For	2	6	29%	44%	2	16	6	5	0	0	43	-21
		Against	6	17			5	23	16	3	0	0	64	
SLO	9	For	4	7	26%	38%	4	18	8	1	1	1	46	-23
		Against	5	17			7	23	11	5	1	1	69	
BUL	8	For	1	9	12%	52%	4	22	5	0	0	0	32	-30
		Against	7	15			3	22	11	2	3	0	62	
Total	65			145			82	293	145	55	14	3	819	

Note:
Stolen ends are the ends won without the last stone advantage.
Last Stone Efficiency: Scoring two or more points with last stone advantage.
Force Efficiency: Forcing the opponent team to score only one point when they have the last stone advantage.

Legend:
>4 More than four points scored **Eff.** Efficiency **LSFE** Last Stone First End

Summary of Big Ends

Points Scored	By	Against	Session	End	Game Result
5	RUS - Russia	EST - Estonia	10	1	11 : 3
5	SLO - Slovenia	LTU - Lithuania	R2	6	10 : 8
5	SVK - Slovakia	SLO - Slovenia	1	9	10 : 4
4	TUR - Turkey	SVK - Slovakia	19	9	8 : 3
4	TUR - Turkey	AUT - Austria	15	8	10 : 2
4	TUR - Turkey	BUL - Bulgaria	2	1	11 : 1
4	FRA - France	SLO - Slovenia	19	3	8 : 1
4	FRA - France	BUL - Bulgaria	14	6	7 : 6
4	RUS - Russia	LAT - Latvia	SF	3	11 : 3
4	RUS - Russia	ESP - Spain	12	5	10 : 6
4	AUT - Austria	ENG - England	2	6	8 : 9
4	ESP - Spain	LAT - Latvia	F	2	12 : 9
4	EST - Estonia	LAT - Latvia	19	7	7 : 8
4	LAT - Latvia	ESP - Spain	F	5	9 : 12
4	LTU - Lithuania	BUL - Bulgaria	R1	2	9 : 6
4	SLO - Slovenia	ENG - England	15	3	10 : 7
4	SVK - Slovakia	WAL - Wales	15	7	9 : 5

Note:
Big ends are defined as ends with a score of four or more points.

Legend:

F	Finals	**R1**	Relegation Session 1	**R2**	Relegation Session 2
SF	Semi-final				

ECC 2021
Lillehammer, Norway

FRI 26 NOV 2021
Start Time 18:00

Le Gruyère AOP European Curling Championships 2021
Lillehammer Youth Hall
B-Division Men

Semi-finals

Session Results and Standings

Sheet	Game	Team	LSFE	1	2	3	4	5	6	7	8	9	10	Extra Ends				Total
G	8	RUS - Russia	*	3	0	4	0	3	1	0	0	X	X					11
	9	LAT - Latvia		0	1	0	1	0	0	0	1	X	X					3
K	9	ESP - Spain		0	2	0	1	0	1	0	1	0	0					5
	8	TUR - Turkey	*	1	0	1	0	2	0	2	0	0	1					7

Play-offs Bracket

Qualification

A3 **WAL 4**
Sheet L
B2 **ESP 8**

A2 **AUT 4**
Sheet F
B3 **LAT 8**

Semi-finals

A1 **TUR 7**
Sheet K
ESP 5

B1 **RUS 11**
Sheet G
LAT 3

Finals

TUR
SAT 27 NOV 11:30
Sheet H
RUS
1st
2nd

ESP
SAT 27 NOV 11:30
Sheet J
LAT
3rd
4th

Final Standings

1		
2		
3		
4		
5	AUT - Austria	
5	WAL - Wales	
7	ENG - England	
8	EST - Estonia	
9	HUN - Hungary	
10	FRA - France	
11	SVK - Slovakia	
12	BEL - Belgium	
13	BLR - Belarus	
14	SLO - Slovenia	
15	LTU - Lithuania	>C
16	BUL - Bulgaria	>C

Legend:
>C To C-Division **LSFE(*)** Last Stone First End **X** Unplayed/unfinished end due to concession

ECC 2021
Lillehammer, Norway

FRI 26 NOV 2021
Start Time 18:00

Le Gruyère AOP European Curling Championships 2021
Lillehammer Youth Hall
B-Division Men

Semi-final B1 v A2/B3

Game Results

Sheet	Game	Team	LSFE	1	2	3	4	5	6	7	8	9	10	Extra Ends				Total
G	8	RUS - Russia	*	3	0	4	0	3	1	0	0	X	X					11
	9	LAT - Latvia		0	1	0	1	0	0	0	1	X	X					3

RUS - Russia		
4	S	GLUKHOV Sergey
3		KLIMOV Evgenii
2	V	MIRONOV Dmitrii
1		KALALB Anton
A		GORYACHEV Daniil

LAT - Latvia		
4	S	TRUKSANS Martins
3	V	KLIVE Janis
2		AVOTINS Aivars
1		BUHOLCS Sandris
A		BUNCIS Roberts Reinis

BUNCIS RR replaced AVOTINS A at the beginning of end 7

Note:
Position and function for each team member:
4 = Fourth, **3** = Third, **2** = Second, **1** = Lead, **A** = Alternate, **S** = Skip, **V** = Vice-Skip

Legend:
LSFE(*) Last Stone First End **X** Unplayed/unfinished end due to concession

ECC 2021
Lillehammer, Norway

FRI 26 NOV 2021
Start Time 18:00

Le Gruyère AOP European Curling Championships 2021
Lillehammer Youth Hall
B-Division Men

Semi-final A1 v A3/B2

Game Results

Sheet	Game	Team	LSFE	1	2	3	4	5	6	7	8	9	10	Extra Ends				Total
K	9	ESP - Spain		0	2	0	1	0	1	0	1	0	0					5
	8	TUR - Turkey	*	1	0	1	0	2	0	2	0	0	1					7

ESP - Spain		
4	S	VEZ Sergio
3		GOMEZ Luis
2		DE PAZ Eduardo
1	V	SHAW Nicholas
A		GARCIA Angel

TUR - Turkey		
4	S	KARAGOZ Ugurcan
3	V	KARAKURT Oguzhan
2		UCAN Muhammed Zeki
1		YUCE Orhun
A		DEMIREL Muhammet Haydar

Note:
Position and function for each team member:
4 = Fourth, **3** = Third, **2** = Second, **1** = Lead, **A** = Alternate, **S** = Skip, **V** = Vice-Skip

Legend:
LSFE(*) Last Stone First End

Session Results and Standings

Sheet	Game	Team	LSFE	1	2	3	4	5	6	7	8	9	10	Extra Ends			Total
H	9	SLO - Slovenia		0	3	0	0	0	5	0	2	0	X				10
	9	LTU - Lithuania	*	1	0	1	0	2	0	2	0	2	X				8

Relegation Bracket

Relegation 1

A7 **SLO 6**
Sheet G
B7 **BLR 9**

A8 **BUL 6**
Sheet K
B8 **LTU 9**

Relegation 2

SLO 10
Sheet H
LTU 8

Final Standings

BLR	1	
SLO	2	
LTU	3	
BUL	4	
B-Division	5	AUT - Austria
	5	WAL - Wales
	7	ENG - England
	8	EST - Estonia
	9	HUN - Hungary
C-Division	10	FRA - France
	11	SVK - Slovakia
	12	BEL - Belgium
	13	BLR - Belarus
	14	SLO - Slovenia
	15	LTU - Lithuania >C
	16	BUL - Bulgaria >C

Legend:
>C To C-Division **LSFE(*)** Last Stone First End **X** Unplayed/unfinished end due to concession

ECC 2021
Lillehammer, Norway

FRI 26 NOV 2021
Start Time 18:00

Le Gruyère AOP European Curling Championships 2021
Lillehammer Youth Hall
B-Division Men

Relegation Game L7 v W8

Game Results

Sheet	Game	Team	LSFE	1	2	3	4	5	6	7	8	9	10	Extra Ends				Total
H	9	SLO - Slovenia		0	3	0	0	0	5	0	2	0	X					10
	9	LTU - Lithuania	*	1	0	1	0	2	0	2	0	2	X					8

SLO - Slovenia		
4	S	CULIC Jure
3	V	URSIC Gasper
1		LAJOVEC Jost
A		VERBINC Gregor
A		TISLER Tomas

LTU - Lithuania		
4	S	RYKOV Konstantin
3		KAMARAUSKAS Paulius
2	V	SKROLIS Arunas
1		KIUDYS Donatas
A		IVANAUSKAS Nedas

Last Stone Draw		Distance
↻	CULIC Jure	18.3cm
↺	URSIC Gasper	76.6cm
Total		**94.9cm**

Last Stone Draw		Distance
↻	RYKOV Konstantin	46.5cm
↺	KIUDYS Donatas	16.5cm
Total		**63.0cm**

SLO playing with only three players - Lead and third play three stones each.

Note:
Position and function for each team member:
4 = Fourth, **3** = Third, **2** = Second, **1** = Lead, **A** = Alternate, **S** = Skip, **V** = Vice-Skip

Legend:
↻ Clockwise ↺ Counter-clockwise **LSFE(*)** Last Stone First End
X Unplayed/unfinished end due to concession

ECC 2021
Lillehammer, Norway

FRI 26 NOV 2021
Start Time 10:00

Le Gruyère AOP European Curling Championships 2021
Lillehammer Youth Hall
B-Division Men

Relegation Session 1

Session Results and Standings

Sheet	Game	Team	LSFE	1	2	3	4	5	6	7	8	9	10	Extra Ends				Total
G	8	SLO - Slovenia		0	1	0	0	1	0	2	1	1	0					6
	8	BLR - Belarus	*	1	0	3	1	0	3	0	0	0	1					9
K	8	BUL - Bulgaria		1	0	0	0	2	0	1	2	0	X					6
	8	LTU - Lithuania	*	0	4	1	1	0	1	0	0	2	X					9

Relegation Bracket

Relegation 1 **Relegation 2** **Final Standings**

A7 **SLO 6**
Sheet G
B7 **BLR 9**

A8 **BUL 6**
Sheet K
B8 **LTU 9**

SLO
FRI 26 NOV 18:00
Sheet H
LTU

BLR

BUL

B-Division

C-Division

1		
2		
3		
4		
5	AUT - Austria	
5	WAL - Wales	
7	ENG - England	
8	EST - Estonia	
9	HUN - Hungary	
10	FRA - France	
11	SVK - Slovakia	
12	BEL - Belgium	
13	BLR - Belarus	
14		
15		
16	BUL - Bulgaria	>C

Legend:
>C To C-Division **LSFE(*)** Last Stone First End **X** Unplayed/unfinished end due to concession

ECC 2021
Lillehammer, Norway

FRI 26 NOV 2021
Start Time 10:00

Le Gruyère AOP European Curling Championships 2021
Lillehammer Youth Hall
B-Division Men

Relegation Game A7 v B7

Game Results

Sheet	Game	Team	LSFE	1	2	3	4	5	6	7	8	9	10	Extra Ends				Total
G	8	SLO - Slovenia		0	1	0	0	1	0	2	1	1	0					6
	8	BLR - Belarus	*	1	0	3	1	0	3	0	0	0	1					9

SLO - Slovenia		
4	S	CULIC Jure
3	V	URSIC Gasper
1		LAJOVEC Jost
A		VERBINC Gregor
A		TISLER Tomas

BLR - Belarus		
4	S	BARKAN Dmitriy
3		RUDNITSKI Dzmitry
2	V	KRYSHTOPA Mikalai
1		CHUBAROV Aleksej
A		-

Last Stone Draw		Distance
↻	URSIC Gasper	23.4cm
↺	CULIC Jure	149.4cm
Total		**172.8cm**

Last Stone Draw		Distance
↻	BARKAN Dmitriy	42.1cm
↺	CHUBAROV Aleksej	33.2cm
Total		**75.3cm**

SLO playing with only three players - Lead and third play three stones each.

Note:
Position and function for each team member:
4 = Fourth, **3** = Third, **2** = Second, **1** = Lead, **A** = Alternate, **S** = Skip, **V** = Vice-Skip

Legend:
↻ Clockwise ↺ Counter-clockwise **LSFE(*)** Last Stone First End

ECC 2021
Lillehammer, Norway

FRI 26 NOV 2021
Start Time 10:00

Le Gruyère AOP European Curling Championships 2021
Lillehammer Youth Hall
B-Division Men

Relegation Game A8 v B8

Game Results

Sheet	Game	Team	LSFE	1	2	3	4	5	6	7	8	9	10	Extra Ends				Total
K	8	BUL - Bulgaria		1	0	0	0	2	0	1	2	0	X					6
	8	LTU - Lithuania	*	0	4	1	1	0	1	0	0	2	X					9

BUL - Bulgaria		
4	S	SEILER Reto
3		MOMERIN Bojidar
2	V	GEORGIEV Stoil
1		PETROV Stanimir
A		RUNTOV Nikolay

LTU - Lithuania		
4	S	RYKOV Konstantin
3		KAMARAUSKAS Paulius
2	V	SKROLIS Arunas
1		KIUDYS Donatas
A		IVANAUSKAS Nedas

Last Stone Draw		Distance
↻	PETROV Stanimir	74.0cm
↺	SEILER Reto	87.8cm
Total		**161.8cm**

Last Stone Draw		Distance
↻	RYKOV Konstantin	73.6cm
↺	KIUDYS Donatas	56.3cm
Total		**129.9cm**

Note:
Position and function for each team member:
4 = Fourth, **3** = Third, **2** = Second, **1** = Lead, **A** = Alternate, **S** = Skip, **V** = Vice-Skip

Legend:
↻ Clockwise ↺ Counter-clockwise **LSFE(*)** Last Stone First End
X Unplayed/unfinished end due to concession

ECC 2021
Lillehammer, Norway

FRI 26 NOV 2021
Start Time 10:00

Le Gruyère AOP European Curling Championships 2021
Lillehammer Youth Hall
B-Division Men

Qualification

Session Results and Standings

Sheet	Game	Team	LSFE	1	2	3	4	5	6	7	8	9	10	Extra Ends				Total
F	8	AUT - Austria	*	0	1	0	1	0	1	0	1	0	X					4
	8	LAT - Latvia		2	0	2	0	1	0	1	0	2	X					8
L	8	ESP - Spain	*	0	2	2	0	2	0	1	0	1	X					8
	8	WAL - Wales		0	0	0	1	0	1	0	2	0	X					4

Play-offs Bracket

Qualification | **Semi-finals** | **Finals**

A3 **WAL 4**
Sheet L
B2 **ESP 8**

A1 **TUR**
FRI 26 NOV 18:00
Sheet K
ESP

A2 **AUT 4**
Sheet F
B3 **LAT 8**

B1 **RUS**
FRI 26 NOV 18:00
Sheet G
LAT

SAT 27 NOV 11:30
Sheet H
1st
2nd

SAT 27 NOV 11:30
Sheet J
3rd
4th

Final Standings

1		
2		
3		
4		
5	AUT - Austria	
5	WAL - Wales	
7	ENG - England	
8	EST - Estonia	
9	HUN - Hungary	
10	FRA - France	
11	SVK - Slovakia	
12	BEL - Belgium	
13	BLR - Belarus	
14		
15		
16	BUL - Bulgaria	>C

Legend:
>C To C-Division **LSFE(*)** Last Stone First End **X** Unplayed/unfinished end due to concession

ECC 2021
Lillehammer, Norway

FRI 26 NOV 2021
Start Time 10:00

Le Gruyère AOP European Curling Championships 2021
Lillehammer Youth Hall
B-Division Men

Qualification A2 v B3

Game Results

Sheet	Game	Team	LSFE	1	2	3	4	5	6	7	8	9	10	Extra Ends				Total
F	8	AUT - Austria	*	0	1	0	1	0	1	0	1	0	X					4
	8	LAT - Latvia		2	0	2	0	1	0	1	0	2	X					8

AUT - Austria		
4	S	GENNER Mathias
3		BACKOFEN Jonas
2	V	REICHEL Martin
1		KIRCHMAIR Lukas
A		HOFER Matthaeus

LAT - Latvia		
4	S	TRUKSANS Martins
3	V	KLIVE Janis
2		AVOTINS Aivars
1		BUHOLCS Sandris
A		BUNCIS Roberts Reinis

Note:
Position and function for each team member:
4 = Fourth, **3** = Third, **2** = Second, **1** = Lead, **A** = Alternate, **S** = Skip, **V** = Vice-Skip

Legend:
LSFE(*) Last Stone First End **X** Unplayed/unfinished end due to concession

ECC 2021
Lillehammer, Norway

FRI 26 NOV 2021
Start Time 10:00

Le Gruyère AOP European Curling Championships 2021
Lillehammer Youth Hall
B-Division Men

Qualification A3 v B2

Game Results

Sheet	Game	Team	LSFE	1	2	3	4	5	6	7	8	9	10	Extra Ends				Total
L	8	ESP - Spain	*	0	2	2	0	2	0	1	0	1	X					8
	8	WAL - Wales		0	0	0	1	0	1	0	2	0	X					4

ESP - Spain		
4	S	VEZ Sergio
3		GOMEZ Luis
2		DE PAZ Eduardo
1	V	SHAW Nicholas
A		GARCIA Angel

WAL - Wales		
4	S	POUGHER James
3		PHILLIPS Rhys
2	V	COOMBS Garry
1		POUGHER Simon
A		LLOYD Martin

Note:
Position and function for each team member:
4 = Fourth, **3** = Third, **2** = Second, **1** = Lead, **A** = Alternate, **S** = Skip, **V** = Vice-Skip

Legend:
LSFE(*) Last Stone First End **X** Unplayed/unfinished end due to concession

Competition Matrix

Group A

Team	AUT	BUL	ENG	FRA	SLO	SVK	TUR	WAL
AUT		8 - 3	8 - 9	4 - 3	7 - 3	5 - 2	2 - 10	9 - 4
BUL	3 - 8		2 - 8	6 - 7	5 - 8	6 - 4	1 - 11	3 - 7
ENG	9 - 8	8 - 2		8 - 3	7 - 10	5 - 9	7 - 6	4 - 9
FRA	3 - 4	7 - 6	3 - 8		8 - 1	6 - 4	3 - 8	4 - 5
SLO	3 - 7	8 - 5	10 - 7	1 - 8		4 - 10	3 - 6	1 - 9
SVK	2 - 5	4 - 6	9 - 5	4 - 6	10 - 4		3 - 8	9 - 5
TUR	10 - 2	11 - 1	6 - 7	8 - 3	6 - 3	8 - 3		10 - 7
WAL	4 - 9	7 - 3	9 - 4	5 - 4	9 - 1	5 - 9	7 - 10	

Standings after Round Robin

Rank	Team	Games	Wins	Losses		
1	TUR - Turkey	7	6	1	Q	
2	AUT - Austria	7	5	2	Q	
3	WAL - Wales	7	4	3	Q	w1
4	ENG - England	7	4	3		w0
5	FRA - France	7	3	4		w1
6	SVK - Slovakia	7	3	4		w0
7	SLO - Slovenia	7	2	5		
8	BUL - Bulgaria	7	1	6		

Competition Matrix

Group B

Team	BEL	BLR	ESP	EST	HUN	LAT	LTU	RUS
BEL		9 - 1	3 - 7	6 - 9	3 - 7	1 - 7	10 - 6	6 - 9
BLR	1 - 9		6 - 10	6 - 9	5 - 8	4 - 7	8 - 5	4 - 10
ESP	7 - 3	10 - 6		7 - 2	7 - 6	8 - 3	11 - 4	6 - 10
EST	9 - 6	9 - 6	2 - 7		9 - 2	7 - 8	8 - 6	3 - 11
HUN	7 - 3	8 - 5	6 - 7	2 - 9		6 - 11	11 - 8	3 - 9
LAT	7 - 1	7 - 4	3 - 8	8 - 7	11 - 6		4 - 8	4 - 8
LTU	6 - 10	5 - 8	4 - 11	6 - 8	8 - 11	8 - 4		2 - 8
RUS	9 - 6	10 - 4	10 - 6	11 - 3	9 - 3	8 - 4	8 - 2	

Standings after Round Robin

Rank	Team	Games	Wins	Losses		
1	RUS - Russia	7	7	0	Q	
2	ESP - Spain	7	6	1	Q	
3	LAT - Latvia	7	4	3	Q	w1
4	EST - Estonia	7	4	3		w0
5	HUN - Hungary	7	3	4		
6	BEL - Belgium	7	2	5		
7	BLR - Belarus	7	1	6		w1
8	LTU - Lithuania	7	1	6		w0

Legend:
Q Qualified for the play-offs **wn** Number of wins (n) against tied teams

Draw Shot Challenge by Group

Group A		Stone	Last Stone Draw in each Round Robin Game							
Rank	**Team**	**Rotation**	**1**	**2**	**3**	**4**	**5**	**6**	**7**	**DSC**
1	WAL - Wales	↻	72.9	31.3	~~93.6~~	35.0	29.8	28.2	58.2	**40.88cm**
		↺	74.3	~~96.8~~	46.9	11.2	12.4	36.9	53.5	
2	AUT - Austria	↻	~~199.6~~	60.7	~~167.0~~	25.2	20.9	139.4	36.9	**49.81cm**
		↺	35.3	6.0	113.5	92.7	1.4	58.5	7.2	
3	FRA - France	↻	46.5	47.6	18.6	~~199.6~~	63.7	92.5	108.8	**51.91cm**
		↺	104.2	27.3	19.0	43.6	29.7	21.4	~~159.4~~	
4	ENG - England	↻	27.6	23.5	23.4	154.8	92.5	8.7	47.3	**54.15cm**
		↺	4.2	51.1	34.5	35.0	147.2	~~185.7~~	~~199.6~~	
5	TUR - Turkey	↻	54.6	8.7	12.7	~~150.9~~	21.8	107.5	148.4	**62.48cm**
		↺	70.7	48.6	~~187.1~~	29.0	133.4	69.7	44.6	
6	SLO - Slovenia	↻	53.0	25.9	13.0	38.1	38.9	120.6	23.3	**64.39cm**
		↺	~~147.1~~	112.1	101.7	~~143.3~~	84.7	37.7	123.7	
7	SVK - Slovakia	↻	32.6	89.1	115.7	68.5	~~199.6~~	11.5	89.8	**76.28cm**
		↺	48.5	33.4	~~199.6~~	21.7	5.4	199.6	199.6	
8	BUL - Bulgaria	↻	84.7	~~199.6~~	~~199.6~~	199.6	15.6	44.0	71.0	**90.37cm**
		↺	140.8	5.5	199.6	64.3	125.6	33.9	99.8	

Group B		Stone	Last Stone Draw in each Round Robin Game							
Rank	**Team**	**Rotation**	**1**	**2**	**3**	**4**	**5**	**6**	**7**	**DSC**
1	HUN - Hungary	↻	63.9	30.4	16.5	55.6	13.8	17.9	~~150.9~~	**35.08cm**
		↺	20.1	78.3	11.8	8.4	~~80.7~~	63.4	40.9	
2	ESP - Spain	↻	35.1	100.5	23.7	58.6	6.3	~~183.8~~	60.3	**41.58cm**
		↺	43.7	15.2	93.1	26.1	20.0	~~186.8~~	16.4	
3	RUS - Russia	↻	33.6	13.0	50.8	16.5	16.1	92.5	~~144.7~~	**44.43cm**
		↺	63.9	45.8	96.5	~~136.3~~	6.1	73.1	25.2	
4	LAT - Latvia	↻	90.0	~~153.0~~	~~136.8~~	11.5	48.7	7.1	117.1	**47.15cm**
		↺	69.4	35.5	46.7	21.5	34.7	42.3	41.3	
5	EST - Estonia	↻	90.8	24.3	~~199.6~~	42.7	43.0	34.7	35.1	**59.57cm**
		↺	~~199.6~~	45.8	67.7	149.2	113.1	59.5	8.9	
6	LTU - Lithuania	↻	114.7	99.2	~~199.6~~	55.5	~~120.2~~	69.4	111.5	**63.37cm**
		↺	13.0	37.9	45.9	69.3	23.3	23.1	97.6	
7	BLR - Belarus	↻	72.7	36.0	32.1	~~199.6~~	4.7	71.7	100.9	**69.79cm**
		↺	46.0	~~199.6~~	55.2	36.0	171.1	11.5	199.6	
8	BEL - Belgium	↻	34.3	126.0	48.1	152.6	169.3	17.7	84.1	**89.57cm**
		↺	~~199.6~~	138.1	~~184.5~~	36.3	57.0	84.3	127.0	

Note:
The Draw Shot Challenge (DSC) is the average distance of all the individual Last Stone Draws (LSD), which were delivered by a team during the round robin. The two least favourable results will be eliminated before calculating the average distance. The team with the lesser DSC receives the higher ranking. If the DSCs are equal then the team with the best non-equal counting LSD receives the higher ranking. In the case where all counting LSDs are equal, the team ranked higher in the official WCF World Rankings is ranked higher.

Legend:
↻ Clockwise ↺ Counter-clockwise **DSC** Draw Shot Challenge

Scoring Analysis

Team	Games		LSFE	Stolen Ends	Last Stone Eff.	Force Eff.	Points Scored 0	1	2	3	4	>4	Total	Plus / Minus
RUS	7	For	6	7	78%	63%	8	8	12	8	1	1	65	+37
		Against	1	0			2	12	5	2	0	0	28	
TUR	7	For	4	18	43%	73%	3	20	12	1	3	0	59	+33
		Against	3	5			4	14	6	0	0	0	26	
ESP	7	For	4	10	52%	63%	2	11	12	7	0	0	56	+22
		Against	3	3			8	15	3	3	1	0	34	
AUT	7	For	4	8	40%	72%	3	15	9	2	1	0	43	+9
		Against	3	6			9	17	5	1	1	0	34	
WAL	7	For	7	11	32%	40%	9	17	10	3	0	0	46	+6
		Against	0	6			3	8	8	4	1	0	40	
LAT	7	For	2	12	26%	67%	1	22	8	2	0	0	44	+2
		Against	5	7			4	18	7	2	1	0	42	
SVK	7	For	3	5	29%	58%	9	15	4	3	1	1	41	+2
		Against	4	9			3	20	6	1	1	0	39	
ENG	7	For	2	13	32%	48%	2	21	9	3	0	0	48	+1
		Against	5	5			4	12	9	3	2	0	47	
EST	7	For	4	5	41%	47%	6	13	6	6	1	0	47	+1
		Against	3	6			3	12	7	5	0	1	46	
FRA	7	For	3	4	26%	83%	7	11	3	3	2	0	34	-2
		Against	4	12			7	25	4	1	0	0	36	
BEL	7	For	2	9	27%	47%	6	17	6	3	0	0	38	-8
		Against	5	9			4	15	8	5	0	0	46	
HUN	7	For	6	5	31%	48%	3	15	8	4	0	0	43	-9
		Against	1	10			5	15	11	5	0	0	52	
LTU	7	For	3	7	26%	19%	4	18	9	1	0	0	39	-21
		Against	4	10			1	11	11	9	0	0	60	
SLO	7	For	4	5	19%	31%	3	14	6	0	1	0	30	-22
		Against	3	15			7	18	8	3	1	1	52	
BLR	7	For	1	5	28%	41%	2	13	6	3	0	0	34	-24
		Against	6	15			5	19	15	3	0	0	58	
BUL	7	For	1	7	10%	55%	4	20	3	0	0	0	26	-27
		Against	6	13			3	19	10	2	2	0	53	
Total	56			131			72	250	123	49	10	2	693	

Note:
Stolen ends are the ends won without the last stone advantage.
Last Stone Efficiency: Scoring two or more points with last stone advantage.
Force Efficiency: Forcing the opponent team to score only one point when they have the last stone advantage.

Legend:
>4 More than four points scored **Eff.** Efficiency **LSFE** Last Stone First End

Summary of Big Ends

Points Scored	By	Against	Session	End	Game Result
5	RUS - Russia	EST - Estonia	10	1	11 : 3
5	SVK - Slovakia	SLO - Slovenia	1	9	10 : 4
4	TUR - Turkey	SVK - Slovakia	19	9	8 : 3
4	TUR - Turkey	AUT - Austria	15	8	10 : 2
4	TUR - Turkey	BUL - Bulgaria	2	1	11 : 1
4	FRA - France	SLO - Slovenia	19	3	8 : 1
4	FRA - France	BUL - Bulgaria	14	6	7 : 6
4	AUT - Austria	ENG - England	2	6	8 : 9
4	EST - Estonia	LAT - Latvia	19	7	7 : 8
4	RUS - Russia	ESP - Spain	12	5	10 : 6
4	SLO - Slovenia	ENG - England	15	3	10 : 7
4	SVK - Slovakia	WAL - Wales	15	7	9 : 5

Note:
Big ends are defined as ends with a score of four or more points.

Session Results and Standings

Sheet	Game	Team	LSFE	1	2	3	4	5	6	7	8	9	10	Extra Ends				Total
G	7	BLR - Belarus		0	3	0	2	1	0	0	0	0	0					6
	7	ESP - Spain	*	2	0	1	0	0	1	2	1	2	1					10
H	7	LAT - Latvia		0	0	0	1	0	1	0	2	1	3					8
	7	EST - Estonia	*	0	1	1	0	1	0	4	0	0	0					7
J	7	FRA - France		0	0	4	2	1	1	X	X	X	X					8
	7	SLO - Slovenia	*	1	0	0	0	0	0	X	X	X	X					1
K	7	ENG - England		0	1	2	2	0	0	1	2	X	X					8
	7	BUL - Bulgaria	*	1	0	0	0	1	0	0	0	X	X					2
L	7	SVK - Slovakia		1	0	0	0	1	0	0	1	0	X					3
	7	TUR - Turkey	*	0	2	1	0	0	0	1	0	4	X					8

Standings after Round Robin

Group A

Rank	Team	Games	Wins	Losses		
1	TUR - Turkey	7	6	1	Q	
2	AUT - Austria	7	5	2	Q	
3	WAL - Wales	7	4	3	Q	w1
4	ENG - England	7	4	3		w0
5	FRA - France	7	3	4		w1
6	SVK - Slovakia	7	3	4		w0
7	SLO - Slovenia	7	2	5		
8	BUL - Bulgaria	7	1	6		

Group B

Rank	Team	Games	Wins	Losses		
1	RUS - Russia	7	7	0	Q	
2	ESP - Spain	7	6	1	Q	
3	LAT - Latvia	7	4	3	Q	w1
4	EST - Estonia	7	4	3		w0
5	HUN - Hungary	7	3	4		
6	BEL - Belgium	7	2	5		
7	BLR - Belarus	7	1	6		w1
8	LTU - Lithuania	7	1	6		w0

Legend:
LSFE(*) Last Stone First End **Q** Qualified for the play-offs **wn** Number of wins (n) against tied teams
X Unplayed/unfinished end due to concession

ECC 2021
Lillehammer, Norway

THU 25 NOV 2021
Start Time 19:00

Le Gruyère AOP European Curling Championships 2021
Lillehammer Youth Hall
B-Division Men

Round Robin Session 19
Group B - Sheet G

Game Results

Sheet	Game	Team	LSFE	1	2	3	4	5	6	7	8	9	10	Extra Ends				Total
G	7	BLR - Belarus		0	3	0	2	1	0	0	0	0	0					6
	7	ESP - Spain	*	2	0	1	0	0	1	2	1	2	1					10

BLR - Belarus		
4	S	BARKAN Dmitriy
3		RUDNITSKI Dzmitry
2	V	KRYSHTOPA Mikalai
1		CHUBAROV Aleksej
A		-

ESP - Spain		
4	S	VEZ Sergio
3		GOMEZ Luis
2		DE PAZ Eduardo
1	V	SHAW Nicholas
A		GARCIA Angel

Last Stone Draw		Distance
↻	CHUBAROV Aleksej	100.9cm
↺	KRYSHTOPA Mikalai	199.6cm
Total		**300.5cm**

Last Stone Draw		Distance
↻	DE PAZ Eduardo	60.3cm
↺	VEZ Sergio	16.4cm
Total		**76.7cm**

GARCIA A replaced GOMEZ L at the beginning of end 7
Revised line-up: (4 S) VEZ S, (3) DE PAZ E, (2) GARCIA A, (1 V) SHAW N

Note:
Position and function for each team member:
4 = Fourth, **3** = Third, **2** = Second, **1** = Lead, **A** = Alternate, **S** = Skip, **V** = Vice-Skip

Legend:
↻ Clockwise ↺ Counter-clockwise **LSFE(*)** Last Stone First End

ECC 2021
Lillehammer, Norway

THU 25 NOV 2021
Start Time 19:00

Le Gruyère AOP European Curling Championships 2021
Lillehammer Youth Hall
B-Division Men

Round Robin Session 19
Group B - Sheet H

Game Results

Sheet	Game	Team	LSFE	1	2	3	4	5	6	7	8	9	10	Extra Ends				Total
H	7	LAT - Latvia		0	0	0	1	0	1	0	2	1	3					8
	7	EST - Estonia	*	0	1	1	0	1	0	4	0	0	0					7

LAT - Latvia		
4	S	TRUKSANS Martins
3	V	KLIVE Janis
2		AVOTINS Aivars
1		BUHOLCS Sandris
A		BUNCIS Roberts Reinis

EST - Estonia		
4	V	VLASSOV Mihhail
3	S	VELTSMAN Eduard
2		KIZIRIDI Janis
1		DZENZELJUK Igor
A		DOTSENKO Konstantin

Last Stone Draw		Distance
↻	BUHOLCS Sandris	117.1cm
↺	TRUKSANS Martins	41.3cm
Total		**158.4cm**

Last Stone Draw		Distance
↻	VELTSMAN Eduard	35.1cm
↺	VLASSOV Mihhail	8.9cm
Total		**44.0cm**

Note:
Position and function for each team member:
4 = Fourth, **3** = Third, **2** = Second, **1** = Lead, **A** = Alternate, **S** = Skip, **V** = Vice-Skip

Legend:
↻ Clockwise ↺ Counter-clockwise **LSFE(*)** Last Stone First End

LE GRUYÈRE SWITZERLAND
LGT Private Banking
MOUNT10
BAUHAUS
CURLIT Curling Information Technology Ltd.

ECC 2021
Lillehammer, Norway

THU 25 NOV 2021
Start Time 19:00

Le Gruyère AOP European Curling Championships 2021
Lillehammer Youth Hall
B-Division Men

Round Robin Session 19
Group A - Sheet J

Game Results

Sheet	Game	Team	LSFE	1	2	3	4	5	6	7	8	9	10	Extra Ends				Total
J	7	FRA - France		0	0	4	2	1	1	X	X	X	X					8
	7	SLO - Slovenia	*	1	0	0	0	0	0	X	X	X	X					1

FRA - France		
4	V	MORARD Quentin
3	S	MERCIER Eddy
2		TUAZ Leo
1		GAUDIN Killian
A		VALVASSORI Yannick

SLO - Slovenia		
4	S	CULIC Jure
3	V	URSIC Gasper
1		LAJOVEC Jost
A		VERBINC Gregor
A		TISLER Tomas

Last Stone Draw		Distance
↻	MERCIER Eddy	108.8cm
↺	MORARD Quentin	159.4cm
Total		**268.2cm**

Last Stone Draw		Distance
↻	CULIC Jure	23.3cm
↺	URSIC Gasper	123.7cm
Total		**147.0cm**

SLO playing with only three players - Lead and third play three stones each.

Note:
Position and function for each team member:
4 = Fourth, **3** = Third, **2** = Second, **1** = Lead, **A** = Alternate, **S** = Skip, **V** = Vice-Skip

Legend:
↻ Clockwise ↺ Counter-clockwise **LSFE(*)** Last Stone First End
X Unplayed/unfinished end due to concession

ECC 2021
Lillehammer, Norway

THU 25 NOV 2021
Start Time 19:00

Le Gruyère AOP European Curling Championships 2021
Lillehammer Youth Hall
B-Division Men

Round Robin Session 19
Group A - Sheet K

Game Results

Sheet	Game	Team	LSFE	1	2	3	4	5	6	7	8	9	10	Extra Ends				Total
K	7	ENG - England		0	1	2	2	0	0	1	2	X	X					8
	7	BUL - Bulgaria	*	1	0	0	0	1	0	0	0	X	X					2

ENG - England	
4 S	WOOLSTON Andrew
3 V	REED Andrew
2	GIBSON Scott
1	JAEGGI Thomas
A	WHITTLE James

BUL - Bulgaria	
4 S	SEILER Reto
3	MOMERIN Bojidar
2 V	GEORGIEV Stoil
1	PETROV Stanimir
A	RUNTOV Nikolay

Last Stone Draw		Distance
↻	JAEGGI Thomas	47.3cm
↺	WOOLSTON Andrew	199.6cm
Total		**246.9cm**

Last Stone Draw		Distance
↻	PETROV Stanimir	71.0cm
↺	GEORGIEV Stoil	99.8cm
Total		**170.8cm**

Note:
Position and function for each team member:
4 = Fourth, **3** = Third, **2** = Second, **1** = Lead, **A** = Alternate, **S** = Skip, **V** = Vice-Skip

Legend:
↻ Clockwise ↺ Counter-clockwise **LSFE(*)** Last Stone First End
X Unplayed/unfinished end due to concession

ECC 2021
Lillehammer, Norway

THU 25 NOV 2021
Start Time 19:00

Le Gruyère AOP European Curling Championships 2021
Lillehammer Youth Hall
B-Division Men

Round Robin Session 19
Group A - Sheet L

Game Results

Sheet	Game	Team	LSFE	1	2	3	4	5	6	7	8	9	10	Extra Ends				Total
L	7	SVK - Slovakia		1	0	0	0	1	0	0	1	0	X					3
	7	TUR - Turkey	*	0	2	1	0	0	0	1	0	4	X					8

SVK - Slovakia		
4		POLAK Jakub
3	S	GALLO Juraj
2	V	PITONAK Peter
1		MASARYK Robert
A		KAPRALIK Patrik

TUR - Turkey		
4	S	KARAGOZ Ugurcan
3	V	KARAKURT Oguzhan
2		DEMIREL Muhammet Haydar
1		YUCE Orhun
A		UCAN Muhammed Zeki

Last Stone Draw		Distance
↻	POLAK Jakub	89.8cm
↺	GALLO Juraj	199.6cm
Total		**289.4cm**

Last Stone Draw		Distance
↻	DEMIREL Muhammet Haydar	148.4cm
↺	KARAGOZ Ugurcan	44.6cm
Total		**193.0cm**

Note:
Position and function for each team member:
4 = Fourth, **3** = Third, **2** = Second, **1** = Lead, **A** = Alternate, **S** = Skip, **V** = Vice-Skip

Legend:
↻ Clockwise ↺ Counter-clockwise **LSFE(*)** Last Stone First End
X Unplayed/unfinished end due to concession

Session Results and Standings

Sheet	Game	Team	LSFE	1	2	3	4	5	6	7	8	9	10	Extra Ends				Total
J	7	BEL - Belgium		0	3	0	0	0	1	0	0	2	0					6
	7	RUS - Russia	*	3	0	0	0	2	0	0	3	0	1					9
K	7	HUN - Hungary	*	2	0	0	2	0	1	1	0	0	2	3				11
	7	LTU - Lithuania		0	3	1	0	1	0	0	1	2	0	0				8

Current Standings

Group A

Rank	Team	Games	Wins	Losses	
1	TUR - Turkey	6	5	1	Q
2	AUT - Austria	7	5	2	Q
3	WAL - Wales	7	4	3	
4	ENG - England	6	3	3	
4	SVK - Slovakia	6	3	3	
6	FRA - France	6	2	4	
6	SLO - Slovenia	6	2	4	
8	BUL - Bulgaria	6	1	5	

Group B

Rank	Team	Games	Wins	Losses	
1	RUS - Russia	7	7	0	Q
2	ESP - Spain	6	5	1	Q
3	EST - Estonia	6	4	2	
4	LAT - Latvia	6	3	3	
5	HUN - Hungary	7	3	4	
6	BEL - Belgium	7	2	5	
7	BLR - Belarus	6	1	5	
8	LTU - Lithuania	7	1	6	

Note:
Under WCF rules, tie-breaking rules for standings are not applied until after the last game of the round robin.

Legend:
LSFE(*) Last Stone First End **Q** Qualified for the play-offs

ECC 2021
Lillehammer, Norway

THU 25 NOV 2021
Start Time 14:00

Le Gruyère AOP European Curling Championships 2021
Lillehammer Youth Hall
B-Division Men

Round Robin Session 18
Group B - Sheet J

Game Results

Sheet	Game	Team	LSFE	1	2	3	4	5	6	7	8	9	10	Extra Ends				Total
J	7	BEL - Belgium		0	3	0	0	0	1	0	0	2	0					6
	7	RUS - Russia	*	3	0	0	0	2	0	0	3	0	1					9

BEL - Belgium		
4	V	SPRUYT Jeroen
3	S	VERREYCKEN Timo
2		YSKOUT Daan
1		VAN LOOY Bram
A		-

RUS - Russia		
4	S	GLUKHOV Sergey
3		KLIMOV Evgenii
2	V	MIRONOV Dmitrii
1		KALALB Anton
A		GORYACHEV Daniil

Last Stone Draw		Distance
↻	YSKOUT Daan	84.1cm
↺	VERREYCKEN Timo	127.0cm
Total		**211.1cm**

Last Stone Draw		Distance
↻	MIRONOV Dmitrii	144.7cm
↺	KLIMOV Evgenii	25.2cm
Total		**169.9cm**

Note:
Position and function for each team member:
4 = Fourth, **3** = Third, **2** = Second, **1** = Lead, **A** = Alternate, **S** = Skip, **V** = Vice-Skip

Legend:
↻ Clockwise ↺ Counter-clockwise **LSFE(*)** Last Stone First End

ECC 2021
Lillehammer, Norway

THU 25 NOV 2021
Start Time 14:00

Le Gruyère AOP European Curling Championships 2021
Lillehammer Youth Hall
B-Division Men

Round Robin Session 18
Group B - Sheet K

Game Results

Sheet	Game	Team	LSFE	1	2	3	4	5	6	7	8	9	10	Extra Ends			Total
K	7	HUN - Hungary	*	2	0	0	2	0	1	1	0	0	2	3			11
	7	LTU - Lithuania		0	3	1	0	1	0	0	1	2	0	0			8

HUN - Hungary		
4		FOTI Balazs
3	S	EZSOL Gabor
2	V	SZABAD Tamas
1		VASPORI Tamas
A		VARGA Balazs

LTU - Lithuania		
4	S	RYKOV Konstantin
3	V	KAMARAUSKAS Paulius
2		IVANAUSKAS Nedas
1		KIUDYS Donatas
A		SKROLIS Arunas

Last Stone Draw		Distance
↻	VASPORI Tamas	150.9cm
↺	FOTI Balazs	40.9cm
Total		**191.8cm**

Last Stone Draw		Distance
↻	RYKOV Konstantin	111.5cm
↺	KIUDYS Donatas	97.6cm
Total		**209.1cm**

Note:
Position and function for each team member:
4 = Fourth, **3** = Third, **2** = Second, **1** = Lead, **A** = Alternate, **S** = Skip, **V** = Vice-Skip

Legend:
↻ Clockwise ↺ Counter-clockwise **LSFE(*)** Last Stone First End

ECC 2021
Lillehammer, Norway

THU 25 NOV 2021
Start Time 9:00

Le Gruyère AOP European Curling Championships 2021
Lillehammer Youth Hall
B-Division Men

Round Robin Session 17

Session Results and Standings

Sheet	Game	Team	LSFE	1	2	3	4	5	6	7	8	9	10	Extra Ends				Total
G	6	SLO - Slovenia	*	0	0	0	2	0	1	0	0	0	0					3
	6	TUR - Turkey		1	1	0	0	2	0	0	0	1	1					6
H	7	WAL - Wales	*	3	0	2	0	1	0	0	2	1	X					9
	6	ENG - England		0	0	0	3	0	1	0	0	0	X					4
J	7	AUT - Austria	*	1	1	0	2	0	1	1	0	2	X					8
	6	BUL - Bulgaria		0	0	1	0	1	0	0	1	0	X					3

Current Standings

Group A

Rank	Team	Games	Wins	Losses	
1	TUR - Turkey	6	5	1	Q
2	AUT - Austria	7	5	2	Q
3	WAL - Wales	7	4	3	
4	ENG - England	6	3	3	
4	SVK - Slovakia	6	3	3	
6	FRA - France	6	2	4	
6	SLO - Slovenia	6	2	4	
8	BUL - Bulgaria	6	1	5	

Group B

Rank	Team	Games	Wins	Losses	
1	RUS - Russia	6	6	0	Q
2	ESP - Spain	6	5	1	Q
3	EST - Estonia	6	4	2	
4	LAT - Latvia	6	3	3	
5	BEL - Belgium	6	2	4	
5	HUN - Hungary	6	2	4	
7	BLR - Belarus	6	1	5	
7	LTU - Lithuania	6	1	5	

Note:
Under WCF rules, tie-breaking rules for standings are not applied until after the last game of the round robin.

Legend:
LSFE(*) Last Stone First End **Q** Qualified for the play-offs **X** Unplayed/unfinished end due to concession

ECC 2021
Lillehammer, Norway

THU 25 NOV 2021
Start Time 9:00

Le Gruyère AOP European Curling Championships 2021
Lillehammer Youth Hall
B-Division Men

Round Robin Session 17
Group A - Sheet G

Game Results

Sheet	Game	Team	LSFE	1	2	3	4	5	6	7	8	9	10	Extra Ends				Total
G	6	SLO - Slovenia	*	0	0	0	2	0	1	0	0	0	0					3
	6	TUR - Turkey		1	1	0	0	2	0	0	0	1	1					6

SLO - Slovenia		
4	S	CULIC Jure
3	V	URSIC Gasper
1		LAJOVEC Jost
A		VERBINC Gregor
A		TISLER Tomas

TUR - Turkey		
4	S	KARAGOZ Ugurcan
3	V	KARAKURT Oguzhan
2		UCAN Muhammed Zeki
1		YUCE Orhun
A		DEMIREL Muhammet Haydar

Last Stone Draw		Distance
↻	LAJOVEC Jost	120.6cm
↺	VERBINC Gregor	37.7cm
Total		**158.3cm**

Last Stone Draw		Distance
↻	KARAKURT Oguzhan	107.5cm
↺	YUCE Orhun	69.7cm
Total		**177.2cm**

SLO playing with only three players - Lead and third play three stones each.

Note:
Position and function for each team member:
4 = Fourth, **3** = Third, **2** = Second, **1** = Lead, **A** = Alternate, **S** = Skip, **V** = Vice-Skip

Legend:
↻ Clockwise ↺ Counter-clockwise **LSFE(*)** Last Stone First End

ECC 2021
Lillehammer, Norway

THU 25 NOV 2021
Start Time 9:00

Le Gruyère AOP European Curling Championships 2021
Lillehammer Youth Hall
B-Division Men

Round Robin Session 17
Group A - Sheet H

Game Results

Sheet	Game	Team	LSFE	1	2	3	4	5	6	7	8	9	10	Extra Ends				Total
H	7	WAL - Wales	*	3	0	2	0	1	0	0	2	1	X					9
	6	ENG - England		0	0	0	3	0	1	0	0	0	X					4

WAL - Wales		
4	S	POUGHER James
3		PHILLIPS Rhys
2	V	COOMBS Garry
1		POUGHER Simon
A		LLOYD Martin

ENG - England		
4	S	WOOLSTON Andrew
3	V	REED Andrew
2		GIBSON Scott
1		WHITTLE James
A		JAEGGI Thomas

Last Stone Draw		Distance
↻	POUGHER Simon	58.2cm
↺	POUGHER James	53.5cm
Total		**111.7cm**

Last Stone Draw		Distance
↻	GIBSON Scott	8.7cm
↺	WHITTLE James	185.7cm
Total		**194.4cm**

Note:
Position and function for each team member:
4 = Fourth, **3** = Third, **2** = Second, **1** = Lead, **A** = Alternate, **S** = Skip, **V** = Vice-Skip

Legend:
↻ Clockwise ↺ Counter-clockwise **LSFE(*)** Last Stone First End
X Unplayed/unfinished end due to concession

ECC 2021
Lillehammer, Norway

THU 25 NOV 2021
Start Time 9:00

Le Gruyère AOP European Curling Championships 2021
Lillehammer Youth Hall
B-Division Men

Round Robin Session 17
Group A - Sheet J

Game Results

Sheet	Game	Team	LSFE	1	2	3	4	5	6	7	8	9	10	Extra Ends				Total
J	7	AUT - Austria	*	1	1	0	2	0	1	1	0	2	X					8
	6	BUL - Bulgaria		0	0	1	0	1	0	0	1	0	X					3

AUT - Austria	
4 S	GENNER Mathias
3	BACKOFEN Jonas
2 V	REICHEL Martin
1	KIRCHMAIR Lukas
A	HOFER Matthaeus

BUL - Bulgaria	
4 S	SEILER Reto
3	MOMERIN Bojidar
2 V	GEORGIEV Stoil
1	PETROV Stanimir
A	RUNTOV Nikolay

Last Stone Draw		Distance
↻	REICHEL Martin	36.9cm
↺	GENNER Mathias	7.2cm
Total		**44.1cm**

Last Stone Draw		Distance
↻	PETROV Stanimir	44.0cm
↺	GEORGIEV Stoil	33.9cm
Total		**77.9cm**

Note:
Position and function for each team member:
4 = Fourth, **3** = Third, **2** = Second, **1** = Lead, **A** = Alternate, **S** = Skip, **V** = Vice-Skip

Legend:
↻ Clockwise ↺ Counter-clockwise **LSFE(*)** Last Stone First End
X Unplayed/unfinished end due to concession

Session Results and Standings

Sheet	Game	Team	LSFE	1	2	3	4	5	6	7	8	9	10	Extra Ends				Total
F	6	LTU - Lithuania	*	1	0	0	2	0	0	1	0	0	X					4
	6	ESP - Spain		0	3	1	0	3	0	0	2	2	X					11
G	6	HUN - Hungary	*	0	2	1	0	1	0	0	2	0	2					8
	6	BLR - Belarus		1	0	0	1	0	1	1	0	1	0					5

Current Standings

Group A

Rank	Team	Games	Wins	Losses
1	TUR - Turkey	5	4	1
2	AUT - Austria	6	4	2
3	ENG - England	5	3	2
4	SVK - Slovakia	6	3	3
4	WAL - Wales	6	3	3
6	SLO - Slovenia	5	2	3
7	FRA - France	6	2	4
8	BUL - Bulgaria	5	1	4

Group B

Rank	Team	Games	Wins	Losses	
1	RUS - Russia	6	6	0	Q
2	ESP - Spain	6	5	1	Q
3	EST - Estonia	6	4	2	
4	LAT - Latvia	6	3	3	
5	BEL - Belgium	6	2	4	
5	HUN - Hungary	6	2	4	
7	BLR - Belarus	6	1	5	
7	LTU - Lithuania	6	1	5	

Note:
Under WCF rules, tie-breaking rules for standings are not applied until after the last game of the round robin.

Legend:
LSFE(*) Last Stone First End **Q** Qualified for the play-offs **X** Unplayed/unfinished end due to concession

ECC 2021
Lillehammer, Norway

Le Gruyère AOP European Curling Championships 2021
Lillehammer Youth Hall
B-Division Men

WED 24 NOV 2021
Start Time 19:00

Round Robin Session 16
Group B - Sheet F

Game Results

Sheet	Game	Team	LSFE	1	2	3	4	5	6	7	8	9	10	Extra Ends				Total
F	6	LTU - Lithuania	*	1	0	0	2	0	0	1	0	0	X					4
	6	ESP - Spain		0	3	1	0	3	0	0	2	2	X					11

LTU - Lithuania		
4	V	RYKOV Konstantin
3	S	SKROLIS Arunas
2		IVANAUSKAS Nedas
1		KIUDYS Donatas
A		KAMARAUSKAS Paulius

ESP - Spain		
4	S	VEZ Sergio
3		GOMEZ Luis
2		DE PAZ Eduardo
1	V	SHAW Nicholas
A		GARCIA Angel

Last Stone Draw		Distance
↻	SKROLIS Arunas	69.4cm
↺	KAMARAUSKAS Paulius	23.1cm
Total		**92.5cm**

Last Stone Draw		Distance
↻	VEZ Sergio	183.8cm
↺	GOMEZ Luis	186.8cm
Total		**370.6cm**

Note:
Position and function for each team member:
4 = Fourth, **3** = Third, **2** = Second, **1** = Lead, **A** = Alternate, **S** = Skip, **V** = Vice-Skip

Legend:
↻ Clockwise ↺ Counter-clockwise **LSFE(*)** Last Stone First End
X Unplayed/unfinished end due to concession

ECC 2021
Lillehammer, Norway

WED 24 NOV 2021
Start Time 19:00

Le Gruyère AOP European Curling Championships 2021
Lillehammer Youth Hall
B-Division Men

Round Robin Session 16
Group B - Sheet G

Game Results

Sheet	Game	Team	LSFE	1	2	3	4	5	6	7	8	9	10	Extra Ends				Total
G	6	HUN - Hungary	*	0	2	1	0	1	0	0	2	0	2					8
	6	BLR - Belarus		1	0	0	1	0	1	1	0	1	0					5

HUN - Hungary		
4		FOTI Balazs
3	S	EZSOL Gabor
2	V	SZABAD Tamas
1		VARGA Balazs
A		VASPORI Tamas

BLR - Belarus		
4	S	BARKAN Dmitriy
3		RUDNITSKI Dzmitry
2	V	KRYSHTOPA Mikalai
1		CHUBAROV Aleksej
A		-

Last Stone Draw		Distance
↻	SZABAD Tamas	17.9cm
↺	EZSOL Gabor	63.4cm
Total		**81.3cm**

Last Stone Draw		Distance
↻	RUDNITSKI Dzmitry	71.7cm
↺	BARKAN Dmitriy	11.5cm
Total		**83.2cm**

Note:
Position and function for each team member:
4 = Fourth, **3** = Third, **2** = Second, **1** = Lead, **A** = Alternate, **S** = Skip, **V** = Vice-Skip

Legend:
↻ Clockwise ↺ Counter-clockwise **LSFE(*)** Last Stone First End

LE GRUYÈRE SWITZERLAND
LGT Private Banking
MOUNT10
BAUHAUS
CURLIT Curling Information Technology Ltd.

Session Results and Standings

Sheet	Game	Team	LSFE	1	2	3	4	5	6	7	8	9	10	Extra Ends				Total
H	6	AUT - Austria		0	1	0	0	0	1	0	0	X	X					2
	5	TUR - Turkey	*	2	0	2	0	1	0	1	4	X	X					10
J	6	SVK - Slovakia		0	0	1	0	3	0	4	0	1	X					9
	6	WAL - Wales	*	0	1	0	1	0	2	0	1	0	X					5
L	5	ENG - England		0	1	0	3	0	0	2	0	1	0					7
	5	SLO - Slovenia	*	0	0	4	0	2	2	0	1	0	1					10

Current Standings

Group A

Rank	Team	Games	Wins	Losses
1	TUR - Turkey	5	4	1
2	AUT - Austria	6	4	2
3	ENG - England	5	3	2
4	SVK - Slovakia	6	3	3
4	WAL - Wales	6	3	3
6	SLO - Slovenia	5	2	3
7	FRA - France	6	2	4
8	BUL - Bulgaria	5	1	4

Group B

Rank	Team	Games	Wins	Losses	
1	RUS - Russia	6	6	0	Q
2	ESP - Spain	5	4	1	Q
3	EST - Estonia	6	4	2	
4	LAT - Latvia	6	3	3	
5	BEL - Belgium	6	2	4	
6	BLR - Belarus	5	1	4	
6	HUN - Hungary	5	1	4	
6	LTU - Lithuania	5	1	4	

Note:
Under WCF rules, tie-breaking rules for standings are not applied until after the last game of the round robin.

Legend:
LSFE(*) Last Stone First End **Q** Qualified for the play-offs **X** Unplayed/unfinished end due to concession

ECC 2021
Lillehammer, Norway

WED 24 NOV 2021
Start Time 14:00

Le Gruyère AOP European Curling Championships 2021
Lillehammer Youth Hall
B-Division Men

Round Robin Session 15
Group A - Sheet H

Game Results

Sheet	Game	Team	LSFE	1	2	3	4	5	6	7	8	9	10	Extra Ends			Total
H	6	AUT - Austria		0	1	0	0	0	1	0	0	X	X				2
	5	TUR - Turkey	*	2	0	2	0	1	0	1	4	X	X				10

AUT - Austria	
4 S	GENNER Mathias
3 V	BACKOFEN Jonas
2	REICHEL Martin
1	KIRCHMAIR Lukas
A	HOFER Matthaeus

TUR - Turkey	
4 S	KARAGOZ Ugurcan
3 V	KARAKURT Oguzhan
2	UCAN Muhammed Zeki
1	YUCE Orhun
A	DEMIREL Muhammet Haydar

Last Stone Draw		Distance
↻	REICHEL Martin	139.4cm
↺	BACKOFEN Jonas	58.5cm
Total		**197.9cm**

Last Stone Draw		Distance
↻	KARAGOZ Ugurcan	21.8cm
↺	UCAN Muhammed Zeki	133.4cm
Total		**155.2cm**

Note:
Position and function for each team member:
4 = Fourth, **3** = Third, **2** = Second, **1** = Lead, **A** = Alternate, **S** = Skip, **V** = Vice-Skip

Legend:
↻ Clockwise ↺ Counter-clockwise **LSFE(*)** Last Stone First End
X Unplayed/unfinished end due to concession

ECC 2021
Lillehammer, Norway

WED 24 NOV 2021
Start Time 14:00

Le Gruyère AOP European Curling Championships 2021
Lillehammer Youth Hall
B-Division Men

Round Robin Session 15
Group A - Sheet J

Game Results

Sheet	Game	Team	LSFE	1	2	3	4	5	6	7	8	9	10	Extra Ends				Total
J	6	SVK - Slovakia		0	0	1	0	3	0	4	0	1	X					9
	6	WAL - Wales	*	0	1	0	1	0	2	0	1	0	X					5

SVK - Slovakia		
4	V	KAPRALIK Patrik
3		POLAK Jakub
2	S	GALLO Juraj
1		PITONAK Peter
A		MASARYK Robert

WAL - Wales		
4	S	POUGHER James
3		PHILLIPS Rhys
2	V	COOMBS Garry
1		POUGHER Simon
A		LLOYD Martin

Last Stone Draw		Distance
↻	KAPRALIK Patrik	11.5cm
↺	PITONAK Peter	199.6cm
Total		**211.1cm**

Last Stone Draw		Distance
↻	PHILLIPS Rhys	28.2cm
↺	COOMBS Garry	36.9cm
Total		**65.1cm**

Note:
Position and function for each team member:
4 = Fourth, **3** = Third, **2** = Second, **1** = Lead, **A** = Alternate, **S** = Skip, **V** = Vice-Skip

Legend:
↻ Clockwise ↺ Counter-clockwise **LSFE(*)** Last Stone First End
X Unplayed/unfinished end due to concession

ECC 2021
Lillehammer, Norway

WED 24 NOV 2021
Start Time 14:00

Le Gruyère AOP European Curling Championships 2021
Lillehammer Youth Hall
B-Division Men

Round Robin Session 15
Group A - Sheet L

Game Results

Sheet	Game	Team	LSFE	1	2	3	4	5	6	7	8	9	10	Extra Ends				Total
L	5	ENG - England		0	1	0	3	0	0	2	0	1	0					7
	5	SLO - Slovenia	*	0	0	4	0	2	2	0	1	0	1					10

ENG - England		
4	S	WOOLSTON Andrew
3	V	REED Andrew
2		GIBSON Scott
1		WHITTLE James
A		JAEGGI Thomas

Last Stone Draw		Distance
↻	WOOLSTON Andrew	92.5cm
↺	REED Andrew	147.2cm
Total		**239.7cm**

SLO - Slovenia		
4	S	CULIC Jure
3	V	URSIC Gasper
1		LAJOVEC Jost
A		VERBINC Gregor
A		TISLER Tomas

Last Stone Draw		Distance
↻	CULIC Jure	38.9cm
↺	URSIC Gasper	84.7cm
Total		**123.6cm**

SLO playing with only three players - Lead and third play three stones each.

Note:
Position and function for each team member:
4 = Fourth, **3** = Third, **2** = Second, **1** = Lead, **A** = Alternate, **S** = Skip, **V** = Vice-Skip

Legend:
↻ Clockwise ↺ Counter-clockwise **LSFE(*)** Last Stone First End

ECC 2021
Lillehammer, Norway

WED 24 NOV 2021
Start Time 9:00

Le Gruyère AOP European Curling Championships 2021
Lillehammer Youth Hall
B-Division Men

Round Robin Session 14

Session Results and Standings

Sheet	Game	Team	LSFE	1	2	3	4	5	6	7	8	9	10	Extra Ends				Total
F	5	BUL - Bulgaria		0	0	2	0	1	0	1	0	1	1					6
	6	FRA - France	*	1	0	0	1	0	4	0	1	0	0					7
G	6	EST - Estonia	*	3	0	0	3	0	2	0	0	0	X					8
	5	LTU - Lithuania		0	1	1	0	1	0	2	1	0	X					6
H	6	BEL - Belgium	*	2	0	0	1	1	2	1	1	1	X					9
	5	BLR - Belarus		0	1	0	0	0	0	0	0	0	X					1
K	5	ESP - Spain	*	2	0	3	0	1	0	1	0	1	X					8
	6	LAT - Latvia		0	0	0	1	0	1	0	1	0	X					3
L	6	RUS - Russia		2	0	0	2	2	1	0	0	2	X					9
	5	HUN - Hungary	*	0	0	1	0	0	0	2	0	0	X					3

Current Standings

Group A

Rank	Team	Games	Wins	Losses
1	AUT - Austria	5	4	1
2	ENG - England	4	3	1
2	TUR - Turkey	4	3	1
4	WAL - Wales	5	3	2
5	SVK - Slovakia	5	2	3
6	FRA - France	6	2	4
7	SLO - Slovenia	4	1	3
8	BUL - Bulgaria	5	1	4

Group B

Rank	Team	Games	Wins	Losses	
1	RUS - Russia	6	6	0	Q
2	ESP - Spain	5	4	1	Q
3	EST - Estonia	6	4	2	
4	LAT - Latvia	6	3	3	
5	BEL - Belgium	6	2	4	
6	BLR - Belarus	5	1	4	
6	HUN - Hungary	5	1	4	
6	LTU - Lithuania	5	1	4	

Note:
Under WCF rules, tie-breaking rules for standings are not applied until after the last game of the round robin.

Legend:
LSFE(*) Last Stone First End **Q** Qualified for the play-offs **X** Unplayed/unfinished end due to concession

ECC 2021
Lillehammer, Norway

WED 24 NOV 2021
Start Time 9:00

Le Gruyère AOP European Curling Championships 2021
Lillehammer Youth Hall
B-Division Men

Round Robin Session 14
Group A - Sheet F

Game Results

Sheet	Game	Team	LSFE	1	2	3	4	5	6	7	8	9	10	Extra Ends				Total
F	5	BUL - Bulgaria		0	0	2	0	1	0	1	0	1	1					6
	6	FRA - France	*	1	0	0	1	0	4	0	1	0	0					7

BUL - Bulgaria		
4	S	SEILER Reto
3		MOMERIN Bojidar
2	V	GEORGIEV Stoil
1		PETROV Stanimir
A		RUNTOV Nikolay

FRA - France		
4	V	MORARD Quentin
3	S	MERCIER Eddy
2		TUAZ Leo
1		GAUDIN Killian
A		VALVASSORI Yannick

Last Stone Draw		Distance
↻	MOMERIN Bojidar	15.6cm
↺	SEILER Reto	125.6cm
Total		**141.2cm**

Last Stone Draw		Distance
↻	GAUDIN Killian	92.5cm
↺	TUAZ Leo	21.4cm
Total		**113.9cm**

Note:
Position and function for each team member:
4 = Fourth, **3** = Third, **2** = Second, **1** = Lead, **A** = Alternate, **S** = Skip, **V** = Vice-Skip

Legend:
↻ Clockwise ↺ Counter-clockwise **LSFE(*)** Last Stone First End

ECC 2021
Lillehammer, Norway

WED 24 NOV 2021
Start Time 9:00

Le Gruyère AOP European Curling Championships 2021
Lillehammer Youth Hall
B-Division Men

Round Robin Session 14
Group B - Sheet G

Game Results

Sheet	Game	Team	LSFE	1	2	3	4	5	6	7	8	9	10	Extra Ends				Total
G	6	EST - Estonia	*	3	0	0	3	0	2	0	0	0	X					8
	5	LTU - Lithuania		0	1	1	0	1	0	2	1	0	X					6

EST - Estonia		
4	V	VLASSOV Mihhail
3	S	VELTSMAN Eduard
2		KIZIRIDI Janis
1		DZENZELJUK Igor
A		DOTSENKO Konstantin

LTU - Lithuania		
4	S	RYKOV Konstantin
3	V	SKROLIS Arunas
2		KAMARAUSKAS Paulius
1		KIUDYS Donatas
A		IVANAUSKAS Nedas

Last Stone Draw		Distance
↻	KIZIRIDI Janis	34.7cm
↺	DZENZELJUK Igor	59.5cm
Total		**94.2cm**

Last Stone Draw		Distance
↻	RYKOV Konstantin	120.2cm
↺	KIUDYS Donatas	23.3cm
Total		**143.5cm**

Note:
Position and function for each team member:
4 = Fourth, **3** = Third, **2** = Second, **1** = Lead, **A** = Alternate, **S** = Skip, **V** = Vice-Skip

Legend:
↻ Clockwise ↺ Counter-clockwise **LSFE(*)** Last Stone First End
X Unplayed/unfinished end due to concession

ECC 2021
Lillehammer, Norway

WED 24 NOV 2021
Start Time 9:00

Le Gruyère AOP European Curling Championships 2021
Lillehammer Youth Hall
B-Division Men

Round Robin Session 14
Group B - Sheet H

Game Results

Sheet	Game	Team	LSFE	1	2	3	4	5	6	7	8	9	10	Extra Ends				Total
H	6	BEL - Belgium	*	2	0	0	1	1	2	1	1	1	X					9
	5	BLR - Belarus		0	1	0	0	0	0	0	0	0	X					1

BEL - Belgium		
4	V	SPRUYT Jeroen
3	S	VERREYCKEN Timo
2		YSKOUT Daan
1		VAN LOOY Bram
A		-

BLR - Belarus		
4	S	BARKAN Dmitriy
3		RUDNITSKI Dzmitry
2	V	KRYSHTOPA Mikalai
1		CHUBAROV Aleksej
A		-

Last Stone Draw		Distance
↻	VAN LOOY Bram	17.7cm
↺	SPRUYT Jeroen	84.3cm
Total		**102.0cm**

Last Stone Draw		Distance
↻	BARKAN Dmitriy	4.7cm
↺	RUDNITSKI Dzmitry	171.1cm
Total		**175.8cm**

Note:
Position and function for each team member:
4 = Fourth, **3** = Third, **2** = Second, **1** = Lead, **A** = Alternate, **S** = Skip, **V** = Vice-Skip

Legend:
↻ Clockwise ↺ Counter-clockwise **LSFE(*)** Last Stone First End
X Unplayed/unfinished end due to concession

ECC 2021
Lillehammer, Norway

WED 24 NOV 2021
Start Time 9:00

Le Gruyère AOP European Curling Championships 2021
Lillehammer Youth Hall
B-Division Men

Round Robin Session 14
Group B - Sheet K

Game Results

Sheet	Game	Team	LSFE	1	2	3	4	5	6	7	8	9	10	Extra Ends				Total
K	5	ESP - Spain	*	2	0	3	0	1	0	1	0	1	X					8
	6	LAT - Latvia		0	0	0	1	0	1	0	1	0	X					3

ESP - Spain		
4	S	VEZ Sergio
3		GOMEZ Luis
2		DE PAZ Eduardo
1	V	SHAW Nicholas
A		GARCIA Angel

LAT - Latvia		
4	S	TRUKSANS Martins
3	V	KLIVE Janis
2		AVOTINS Aivars
1		BUHOLCS Sandris
A		BUNCIS Roberts Reinis

Last Stone Draw		Distance
↻	SHAW Nicholas	6.3cm
↺	VEZ Sergio	20.0cm
Total		**26.3cm**

Last Stone Draw		Distance
↻	BUHOLCS Sandris	7.1cm
↺	KLIVE Janis	42.3cm
Total		**49.4cm**

Note:
Position and function for each team member:
4 = Fourth, **3** = Third, **2** = Second, **1** = Lead, **A** = Alternate, **S** = Skip, **V** = Vice-Skip

Legend:
↻ Clockwise ↺ Counter-clockwise **LSFE(*)** Last Stone First End
X Unplayed/unfinished end due to concession

ECC 2021
Lillehammer, Norway

Le Gruyère AOP European Curling Championships 2021
Lillehammer Youth Hall
B-Division Men

WED 24 NOV 2021
Start Time 9:00

Round Robin Session 14
Group B - Sheet L

Game Results

Sheet	Game	Team	LSFE	1	2	3	4	5	6	7	8	9	10	Extra Ends				Total
L	6	RUS - Russia		2	0	0	2	2	1	0	0	2	X					9
	5	HUN - Hungary	*	0	0	1	0	0	0	2	0	0	X					3

RUS - Russia	
4 S	GLUKHOV Sergey
3	KLIMOV Evgenii
2 V	MIRONOV Dmitrii
1	KALALB Anton
A	GORYACHEV Daniil

HUN - Hungary	
4	FOTI Balazs
3 S	EZSOL Gabor
2 V	SZABAD Tamas
1	VARGA Balazs
A	VASPORI Tamas

Last Stone Draw		Distance
↻	KALALB Anton	92.5cm
↺	GLUKHOV Sergey	73.1cm
Total		**165.6cm**

Last Stone Draw		Distance
↻	EZSOL Gabor	13.8cm
↺	SZABAD Tamas	80.7cm
Total		**94.5cm**

Note:
Position and function for each team member:
4 = Fourth, **3** = Third, **2** = Second, **1** = Lead, **A** = Alternate, **S** = Skip, **V** = Vice-Skip

Legend:
↻ Clockwise ↺ Counter-clockwise **LSFE(*)** Last Stone First End
X Unplayed/unfinished end due to concession

Session Results and Standings

Sheet	Game	Team	LSFE	1	2	3	4	5	6	7	8	9	10	Extra Ends				Total
K	5	SVK - Slovakia		0	0	0	0	2	0	0	0	0	X					2
	5	AUT - Austria	*	1	0	0	0	0	2	1	1	0	X					5

Current Standings

Group A

Rank	Team	Games	Wins	Losses
1	AUT - Austria	5	4	1
2	ENG - England	4	3	1
2	TUR - Turkey	4	3	1
4	WAL - Wales	5	3	2
5	SVK - Slovakia	5	2	3
6	BUL - Bulgaria	4	1	3
6	SLO - Slovenia	4	1	3
8	FRA - France	5	1	4

Group B

Rank	Team	Games	Wins	Losses	
1	RUS - Russia	5	5	0	Q
2	ESP - Spain	4	3	1	
3	EST - Estonia	5	3	2	
3	LAT - Latvia	5	3	2	
5	BLR - Belarus	4	1	3	
5	HUN - Hungary	4	1	3	
5	LTU - Lithuania	4	1	3	
8	BEL - Belgium	5	1	4	

Note:
Under WCF rules, tie-breaking rules for standings are not applied until after the last game of the round robin.

Legend:
LSFE(*) Last Stone First End **Q** Qualified for the play-offs **X** Unplayed/unfinished end due to concession

ECC 2021
Lillehammer, Norway

TUE 23 NOV 2021
Start Time 19:00

Le Gruyère AOP European Curling Championships 2021
Lillehammer Youth Hall
B-Division Men

Round Robin Session 13
Group A - Sheet K

Game Results

Sheet	Game	Team	LSFE	1	2	3	4	5	6	7	8	9	10	Extra Ends				Total
K	5	SVK - Slovakia		0	0	0	0	2	0	0	0	0	X					2
	5	AUT - Austria	*	1	0	0	0	0	2	1	1	0	X					5

SVK - Slovakia		
4	V	KAPRALIK Patrik
3		POLAK Jakub
2	S	GALLO Juraj
1		PITONAK Peter
A		MASARYK Robert

AUT - Austria		
4	S	GENNER Mathias
3	V	BACKOFEN Jonas
2		REICHEL Martin
1		KIRCHMAIR Lukas
A		HOFER Matthaeus

Last Stone Draw		Distance
↻	PITONAK Peter	199.6cm
↺	KAPRALIK Patrik	5.4cm
Total		**205.0cm**

Last Stone Draw		Distance
↻	KIRCHMAIR Lukas	20.9cm
↺	GENNER Mathias	1.4cm
Total		**22.3cm**

Note:
Position and function for each team member:
4 = Fourth, **3** = Third, **2** = Second, **1** = Lead, **A** = Alternate, **S** = Skip, **V** = Vice-Skip

Legend:
↻ Clockwise ↺ Counter-clockwise **LSFE(*)** Last Stone First End
X Unplayed/unfinished end due to concession

ECC 2021
Lillehammer, Norway

TUE 23 NOV 2021
Start Time 14:00

Le Gruyère AOP European Curling Championships 2021
Lillehammer Youth Hall
B-Division Men

Round Robin Session 12

Session Results and Standings

Sheet	Game	Team	LSFE	1	2	3	4	5	6	7	8	9	10	Extra Ends				Total
G	4	LTU - Lithuania	*	1	0	0	2	0	0	1	0	2	X					6
	5	BEL - Belgium		0	3	1	0	1	3	0	2	0	X					10
H	4	ESP - Spain		0	2	0	3	0	1	0	0	0	X					6
	5	RUS - Russia	*	3	0	2	0	4	0	0	0	1	X					10
J	5	LAT - Latvia		0	2	2	0	2	0	3	0	2	X					11
	4	HUN - Hungary	*	3	0	0	1	0	1	0	1	0	X					6
K	5	EST - Estonia	*	2	0	0	2	0	2	0	0	3	X					9
	4	BLR - Belarus		0	0	3	0	2	0	1	0	0	X					6
L	4	BUL - Bulgaria		0	0	1	0	0	0	0	2	0	X					3
	5	WAL - Wales	*	1	1	0	2	0	1	1	0	1	X					7

Current Standings

Group A

Rank	Team	Games	Wins	Losses
1	AUT - Austria	4	3	1
1	ENG - England	4	3	1
1	TUR - Turkey	4	3	1
4	WAL - Wales	5	3	2
5	SVK - Slovakia	4	2	2
6	BUL - Bulgaria	4	1	3
6	SLO - Slovenia	4	1	3
8	FRA - France	5	1	4

Group B

Rank	Team	Games	Wins	Losses	
1	RUS - Russia	5	5	0	Q
2	ESP - Spain	4	3	1	
3	EST - Estonia	5	3	2	
3	LAT - Latvia	5	3	2	
5	BLR - Belarus	4	1	3	
5	HUN - Hungary	4	1	3	
5	LTU - Lithuania	4	1	3	
8	BEL - Belgium	5	1	4	

Note:
Under WCF rules, tie-breaking rules for standings are not applied until after the last game of the round robin.

Legend:
LSFE(*) Last Stone First End **Q** Qualified for the play-offs **X** Unplayed/unfinished end due to concession

ECC 2021
Lillehammer, Norway

TUE 23 NOV 2021
Start Time 14:00

Le Gruyère AOP European Curling Championships 2021
Lillehammer Youth Hall
B-Division Men

Round Robin Session 12
Group B - Sheet G

Game Results

Sheet	Game	Team	LSFE	1	2	3	4	5	6	7	8	9	10	Extra Ends				Total
G	4	LTU - Lithuania	*	1	0	0	2	0	0	1	0	2	X					6
	5	BEL - Belgium		0	3	1	0	1	3	0	2	0	X					10

LTU - Lithuania		
4	S	RYKOV Konstantin
3	V	SKROLIS Arunas
2		KAMARAUSKAS Paulius
1		KIUDYS Donatas
A		IVANAUSKAS Nedas

BEL - Belgium		
4	V	SPRUYT Jeroen
3	S	VERREYCKEN Timo
2		YSKOUT Daan
1		VAN LOOY Bram
A		-

Last Stone Draw		Distance
↻	KAMARAUSKAS Paulius	55.5cm
↺	SKROLIS Arunas	69.3cm
Total		**124.8cm**

Last Stone Draw		Distance
↻	SPRUYT Jeroen	169.3cm
↺	VAN LOOY Bram	57.0cm
Total		**226.3cm**

IVANAUSKAS N replaced KAMARAUSKAS P at the beginning of end 8

Note:
Position and function for each team member:
4 = Fourth, **3** = Third, **2** = Second, **1** = Lead, **A** = Alternate, **S** = Skip, **V** = Vice-Skip

Legend:
↻ Clockwise ↺ Counter-clockwise **LSFE(*)** Last Stone First End
X Unplayed/unfinished end due to concession

ECC 2021
Lillehammer, Norway

TUE 23 NOV 2021
Start Time 14:00

Le Gruyère AOP European Curling Championships 2021
Lillehammer Youth Hall
B-Division Men

Round Robin Session 12
Group B - Sheet H

Game Results

Sheet	Game	Team	LSFE	1	2	3	4	5	6	7	8	9	10	Extra Ends				Total
H	4	ESP - Spain		0	2	0	3	0	1	0	0	0	X					6
	5	RUS - Russia	*	3	0	2	0	4	0	0	0	1	X					10

ESP - Spain		
4	S	VEZ Sergio
3		GOMEZ Luis
2		DE PAZ Eduardo
1	V	SHAW Nicholas
A		GARCIA Angel

RUS - Russia		
4	S	GLUKHOV Sergey
3		KLIMOV Evgenii
2	V	MIRONOV Dmitrii
1		KALALB Anton
A		GORYACHEV Daniil

Last Stone Draw		Distance
↻	GOMEZ Luis	58.6cm
↺	DE PAZ Eduardo	26.1cm
Total		**84.7cm**

Last Stone Draw		Distance
↻	GLUKHOV Sergey	16.1cm
↺	KALALB Anton	6.1cm
Total		**22.2cm**

Note:
Position and function for each team member:
4 = Fourth, **3** = Third, **2** = Second, **1** = Lead, **A** = Alternate, **S** = Skip, **V** = Vice-Skip

Legend:
↻ Clockwise ↺ Counter-clockwise **LSFE(*)** Last Stone First End
X Unplayed/unfinished end due to concession

ECC 2021
Lillehammer, Norway

TUE 23 NOV 2021
Start Time 14:00

Le Gruyère AOP European Curling Championships 2021
Lillehammer Youth Hall
B-Division Men

Round Robin Session 12
Group B - Sheet J

Game Results

Sheet	Game	Team	LSFE	1	2	3	4	5	6	7	8	9	10	Extra Ends				Total
J	5	LAT - Latvia		0	2	2	0	2	0	3	0	2	X					11
	4	HUN - Hungary	*	3	0	0	1	0	1	0	1	0	X					6

LAT - Latvia		
4	S	TRUKSANS Martins
3	V	KLIVE Janis
2		AVOTINS Aivars
1		BUHOLCS Sandris
A		BUNCIS Roberts Reinis

HUN - Hungary		
4		FOTI Balazs
3	S	EZSOL Gabor
2	V	SZABAD Tamas
1		VARGA Balazs
A		VASPORI Tamas

Last Stone Draw		Distance
↻	AVOTINS Aivars	48.7cm
↺	TRUKSANS Martins	34.7cm
Total		**83.4cm**

Last Stone Draw		Distance
↻	EZSOL Gabor	55.6cm
↺	SZABAD Tamas	8.4cm
Total		**64.0cm**

Note:
Position and function for each team member:
4 = Fourth, **3** = Third, **2** = Second, **1** = Lead, **A** = Alternate, **S** = Skip, **V** = Vice-Skip

Legend:
↻ Clockwise ↺ Counter-clockwise **LSFE(*)** Last Stone First End
X Unplayed/unfinished end due to concession

ECC 2021
Lillehammer, Norway

TUE 23 NOV 2021
Start Time 14:00

Le Gruyère AOP European Curling Championships 2021
Lillehammer Youth Hall
B-Division Men

Round Robin Session 12
Group B - Sheet K

Game Results

Sheet	Game	Team	LSFE	1	2	3	4	5	6	7	8	9	10	Extra Ends				Total
K	5	EST - Estonia	*	2	0	0	2	0	2	0	0	3	X					9
	4	BLR - Belarus		0	0	3	0	2	0	1	0	0	X					6

EST - Estonia		
4	V	VLASSOV Mihhail
3	S	VELTSMAN Eduard
2		KIZIRIDI Janis
1		DZENZELJUK Igor
A		DOTSENKO Konstantin

BLR - Belarus		
4	S	BARKAN Dmitriy
3		RUDNITSKI Dzmitry
2	V	KRYSHTOPA Mikalai
1		CHUBAROV Aleksej
A		-

Last Stone Draw		Distance
↻	VLASSOV Mihhail	43.0cm
↺	VELTSMAN Eduard	113.1cm
Total		**156.1cm**

Last Stone Draw		Distance
↻	KRYSHTOPA Mikalai	199.6cm
↺	CHUBAROV Aleksej	36.0cm
Total		**235.6cm**

Note:
Position and function for each team member:
4 = Fourth, **3** = Third, **2** = Second, **1** = Lead, **A** = Alternate, **S** = Skip, **V** = Vice-Skip

Legend:
↻ Clockwise ↺ Counter-clockwise **LSFE(*)** Last Stone First End
X Unplayed/unfinished end due to concession

ECC 2021
Lillehammer, Norway

TUE 23 NOV 2021
Start Time 14:00

Le Gruyère AOP European Curling Championships 2021
Lillehammer Youth Hall
B-Division Men

Round Robin Session 12
Group A - Sheet L

Game Results

Sheet	Game	Team	LSFE	1	2	3	4	5	6	7	8	9	10	Extra Ends				Total
L	4	BUL - Bulgaria		0	0	1	0	0	0	0	2	0	X					3
	5	WAL - Wales	*	1	1	0	2	0	1	1	0	1	X					7

BUL - Bulgaria		
4	S	SEILER Reto
3		MOMERIN Bojidar
2	V	GEORGIEV Stoil
1		PETROV Stanimir
A		RUNTOV Nikolay

WAL - Wales		
4	S	POUGHER James
3		PHILLIPS Rhys
2	V	COOMBS Garry
1		POUGHER Simon
A		LLOYD Martin

Last Stone Draw		Distance
↻	GEORGIEV Stoil	199.6cm
↺	PETROV Stanimir	64.3cm
Total		**263.9cm**

Last Stone Draw		Distance
↻	PHILLIPS Rhys	29.8cm
↺	POUGHER James	12.4cm
Total		**42.2cm**

Note:
Position and function for each team member:
4 = Fourth, **3** = Third, **2** = Second, **1** = Lead, **A** = Alternate, **S** = Skip, **V** = Vice-Skip

Legend:
↻ Clockwise ↺ Counter-clockwise **LSFE(*)** Last Stone First End
X Unplayed/unfinished end due to concession

ECC 2021
Lillehammer, Norway

TUE 23 NOV 2021
Start Time 9:00

Le Gruyère AOP European Curling Championships 2021
Lillehammer Youth Hall
B-Division Men

Round Robin Session 11

Session Results and Standings

Sheet	Game	Team	LSFE	1	2	3	4	5	6	7	8	9	10	Extra Ends				Total
G	4	ENG - England		0	0	1	0	2	0	0	2	0	X					5
	4	SVK - Slovakia	*	0	2	0	1	0	1	2	0	3	X					9
K	4	TUR - Turkey		1	1	1	0	1	1	0	1	2	X					8
	5	FRA - France	*	0	0	0	2	0	0	1	0	0	X					3
L	4	SLO - Slovenia		0	1	0	0	0	1	0	0	1	X					3
	4	AUT - Austria	*	3	0	0	1	0	0	2	1	0	X					7

Current Standings

Group A

Rank	Team	Games	Wins	Losses
1	AUT - Austria	4	3	1
1	ENG - England	4	3	1
1	TUR - Turkey	4	3	1
4	SVK - Slovakia	4	2	2
4	WAL - Wales	4	2	2
6	BUL - Bulgaria	3	1	2
7	SLO - Slovenia	4	1	3
8	FRA - France	5	1	4

Group B

Rank	Team	Games	Wins	Losses
1	RUS - Russia	4	4	0
2	ESP - Spain	3	3	0
3	EST - Estonia	4	2	2
3	LAT - Latvia	4	2	2
5	BLR - Belarus	3	1	2
5	HUN - Hungary	3	1	2
5	LTU - Lithuania	3	1	2
8	BEL - Belgium	4	0	4

Note:
Under WCF rules, tie-breaking rules for standings are not applied until after the last game of the round robin.

Legend:
LSFE(*) Last Stone First End **X** Unplayed/unfinished end due to concession

ECC 2021
Lillehammer, Norway

TUE 23 NOV 2021
Start Time 9:00

Le Gruyère AOP European Curling Championships 2021
Lillehammer Youth Hall
B-Division Men

Round Robin Session 11
Group A - Sheet G

Game Results

Sheet	Game	Team	LSFE	1	2	3	4	5	6	7	8	9	10	Extra Ends			Total
G	4	ENG - England		0	0	1	0	2	0	0	2	0	X				5
	4	SVK - Slovakia	*	0	2	0	1	0	1	2	0	3	X				9

ENG - England		
4	S	WOOLSTON Andrew
3	V	REED Andrew
2		GIBSON Scott
1		WHITTLE James
A		JAEGGI Thomas

SVK - Slovakia		
4	V	KAPRALIK Patrik
3		POLAK Jakub
2	S	GALLO Juraj
1		PITONAK Peter
A		MASARYK Robert

Last Stone Draw		Distance
↻	WHITTLE James	154.8cm
↺	GIBSON Scott	35.0cm
Total		**189.8cm**

Last Stone Draw		Distance
↻	KAPRALIK Patrik	68.5cm
↺	GALLO Juraj	21.7cm
Total		**90.2cm**

Note:
Position and function for each team member:
4 = Fourth, **3** = Third, **2** = Second, **1** = Lead, **A** = Alternate, **S** = Skip, **V** = Vice-Skip

Legend:
↻ Clockwise ↺ Counter-clockwise **LSFE(*)** Last Stone First End
X Unplayed/unfinished end due to concession

ECC 2021
Lillehammer, Norway

TUE 23 NOV 2021
Start Time 9:00

Le Gruyère AOP European Curling Championships 2021
Lillehammer Youth Hall
B-Division Men

Round Robin Session 11
Group A - Sheet K

Game Results

Sheet	Game	Team	LSFE	1	2	3	4	5	6	7	8	9	10	Extra Ends				Total
K	4	TUR - Turkey		1	1	1	0	1	1	0	1	2	X					8
	5	FRA - France	*	0	0	0	2	0	0	1	0	0	X					3

TUR - Turkey		
4	S	KARAGOZ Ugurcan
3	V	KARAKURT Oguzhan
2		DEMIREL Muhammet Haydar
1		YUCE Orhun
A		UCAN Muhammed Zeki

FRA - France		
4	V	MORARD Quentin
3	S	MERCIER Eddy
2		TUAZ Leo
1		GAUDIN Killian
A		VALVASSORI Yannick

Last Stone Draw		Distance
↻	YUCE Orhun	150.9cm
↺	KARAKURT Oguzhan	29.0cm
Total		**179.9cm**

Last Stone Draw		Distance
↻	MERCIER Eddy	63.7cm
↺	MORARD Quentin	29.7cm
Total		**93.4cm**

Note:
Position and function for each team member:
4 = Fourth, **3** = Third, **2** = Second, **1** = Lead, **A** = Alternate, **S** = Skip, **V** = Vice-Skip

Legend:
↻ Clockwise ↺ Counter-clockwise **LSFE(*)** Last Stone First End
X Unplayed/unfinished end due to concession

ECC 2021
Lillehammer, Norway

TUE 23 NOV 2021
Start Time 9:00

Le Gruyère AOP European Curling Championships 2021
Lillehammer Youth Hall
B-Division Men

Round Robin Session 11
Group A - Sheet L

Game Results

Sheet	Game	Team	LSFE	1	2	3	4	5	6	7	8	9	10	Extra Ends				Total
L	4	SLO - Slovenia		0	1	0	0	0	1	0	0	1	X					3
	4	AUT - Austria	*	3	0	0	1	0	0	2	1	0	X					7

SLO - Slovenia		
4	S	CULIC Jure
3		URSIC Gasper
2		LAJOVEC Jost
1	V	VERBINC Gregor
A		TISLER Tomas

AUT - Austria		
4	S	GENNER Mathias
3	V	BACKOFEN Jonas
2		REICHEL Martin
1		KIRCHMAIR Lukas
A		HOFER Matthaeus

Last Stone Draw		Distance
↻	VERBINC Gregor	38.1cm
↺	LAJOVEC Jost	143.3cm
Total		**181.4cm**

Last Stone Draw		Distance
↻	REICHEL Martin	25.2cm
↺	BACKOFEN Jonas	92.7cm
Total		**117.9cm**

Note:
Position and function for each team member:
4 = Fourth, **3** = Third, **2** = Second, **1** = Lead, **A** = Alternate, **S** = Skip, **V** = Vice-Skip

Legend:
↻ Clockwise ↺ Counter-clockwise **LSFE(*)** Last Stone First End
X Unplayed/unfinished end due to concession

ECC 2021
Lillehammer, Norway

MON 22 NOV 2021
Start Time 20:00

Le Gruyère AOP European Curling Championships 2021
Lillehammer Youth Hall
B-Division Men

Round Robin Session 10

Session Results and Standings

Sheet	Game	Team	LSFE	1	2	3	4	5	6	7	8	9	10	Extra Ends				Total
F	4	LAT - Latvia	*	1	1	0	0	2	1	1	1	X	X					7
	4	BEL - Belgium		0	0	0	1	0	0	0	0	X	X					1
G	4	WAL - Wales	*	0	0	1	2	0	0	1	0	X	X					4
	3	AUT - Austria		0	2	0	0	3	2	0	2	X	X					9
K	4	RUS - Russia	*	5	0	3	0	3	0	X	X	X	X					11
	4	EST - Estonia		0	1	0	1	0	1	X	X	X	X					3
L	4	FRA - France		0	3	0	0	0	0	0	0	0	X					3
	3	ENG - England	*	1	0	1	2	0	1	1	1	1	X					8

Current Standings

Group A

Rank	Team	Games	Wins	Losses
1	ENG - England	3	3	0
2	AUT - Austria	3	2	1
2	TUR - Turkey	3	2	1
4	WAL - Wales	4	2	2
5	BUL - Bulgaria	3	1	2
5	SLO - Slovenia	3	1	2
5	SVK - Slovakia	3	1	2
8	FRA - France	4	1	3

Group B

Rank	Team	Games	Wins	Losses
1	RUS - Russia	4	4	0
2	ESP - Spain	3	3	0
3	EST - Estonia	4	2	2
3	LAT - Latvia	4	2	2
5	BLR - Belarus	3	1	2
5	HUN - Hungary	3	1	2
5	LTU - Lithuania	3	1	2
8	BEL - Belgium	4	0	4

Note:
Under WCF rules, tie-breaking rules for standings are not applied until after the last game of the round robin.

Legend:
LSFE(*) Last Stone First End **X** Unplayed/unfinished end due to concession

ECC 2021
Lillehammer, Norway

MON 22 NOV 2021
Start Time 20:00

Le Gruyère AOP European Curling Championships 2021
Lillehammer Youth Hall
B-Division Men

Round Robin Session 10
Group B - Sheet F

Game Results

Sheet	Game	Team	LSFE	1	2	3	4	5	6	7	8	9	10	Extra Ends			Total
F	4	LAT - Latvia	*	1	1	0	0	2	1	1	1	X	X				7
	4	BEL - Belgium		0	0	0	1	0	0	0	0	X	X				1

LAT - Latvia		
4	S	TRUKSANS Martins
3	V	KLIVE Janis
2		AVOTINS Aivars
1		BUHOLCS Sandris
A		BUNCIS Roberts Reinis

BEL - Belgium		
4	V	SPRUYT Jeroen
3	S	VERREYCKEN Timo
2		YSKOUT Daan
1		VAN LOOY Bram
A		-

Last Stone Draw		Distance
↻	BUHOLCS Sandris	11.5cm
↺	KLIVE Janis	21.5cm
Total		**33.0cm**

Last Stone Draw		Distance
↻	VAN LOOY Bram	152.6cm
↺	SPRUYT Jeroen	36.3cm
Total		**188.9cm**

Note:
Position and function for each team member:
4 = Fourth, **3** = Third, **2** = Second, **1** = Lead, **A** = Alternate, **S** = Skip, **V** = Vice-Skip

Legend:
↻ Clockwise ↺ Counter-clockwise **LSFE(*)** Last Stone First End
X Unplayed/unfinished end due to concession

ECC 2021
Lillehammer, Norway

MON 22 NOV 2021
Start Time 20:00

Le Gruyère AOP European Curling Championships 2021
Lillehammer Youth Hall
B-Division Men

Round Robin Session 10
Group A - Sheet G

Game Results

Sheet	Game	Team	LSFE	1	2	3	4	5	6	7	8	9	10	Extra Ends			Total
G	4	WAL - Wales	*	0	0	1	2	0	0	1	0	X	X				4
	3	AUT - Austria		0	2	0	0	3	2	0	2	X	X				9

WAL - Wales		
4	S	POUGHER James
3		PHILLIPS Rhys
2	V	COOMBS Garry
1		POUGHER Simon
A		LLOYD Martin

AUT - Austria		
4	S	GENNER Mathias
3	V	BACKOFEN Jonas
2		REICHEL Martin
1		KIRCHMAIR Lukas
A		HOFER Matthaeus

Last Stone Draw		Distance
↻	POUGHER James	35.0cm
↺	COOMBS Garry	11.2cm
Total		**46.2cm**

Last Stone Draw		Distance
↻	GENNER Mathias	167.0cm
↺	KIRCHMAIR Lukas	113.5cm
Total		**280.5cm**

Note:
Position and function for each team member:
4 = Fourth, **3** = Third, **2** = Second, **1** = Lead, **A** = Alternate, **S** = Skip, **V** = Vice-Skip

Legend:
↻ Clockwise ↺ Counter-clockwise **LSFE(*)** Last Stone First End
X Unplayed/unfinished end due to concession

ECC 2021
Lillehammer, Norway

MON 22 NOV 2021
Start Time 20:00

Le Gruyère AOP European Curling Championships 2021
Lillehammer Youth Hall
B-Division Men

Round Robin Session 10
Group B - Sheet K

Game Results

Sheet	Game	Team	LSFE	1	2	3	4	5	6	7	8	9	10	Extra Ends				Total
K	4	RUS - Russia	*	5	0	3	0	3	0	X	X	X	X					11
	4	EST - Estonia		0	1	0	1	0	1	X	X	X	X					3

RUS - Russia		
4	S	GLUKHOV Sergey
3		KLIMOV Evgenii
2	V	MIRONOV Dmitrii
1		KALALB Anton
A		GORYACHEV Daniil

EST - Estonia		
4	V	VLASSOV Mihhail
3	S	VELTSMAN Eduard
2		KIZIRIDI Janis
1		DZENZELJUK Igor
A		DOTSENKO Konstantin

Last Stone Draw		Distance
↻	MIRONOV Dmitrii	16.5cm
↺	KLIMOV Evgenii	136.3cm
Total		**152.8cm**

Last Stone Draw		Distance
↻	DZENZELJUK Igor	42.7cm
↺	KIZIRIDI Janis	149.2cm
Total		**191.9cm**

DOTSENKO K replaced DZENZELJUK I at the beginning of end 5

Note:
Position and function for each team member:
4 = Fourth, **3** = Third, **2** = Second, **1** = Lead, **A** = Alternate, **S** = Skip, **V** = Vice-Skip

Legend:
↻ Clockwise ↺ Counter-clockwise **LSFE(*)** Last Stone First End
X Unplayed/unfinished end due to concession

ECC 2021
Lillehammer, Norway

MON 22 NOV 2021
Start Time 20:00

Le Gruyère AOP European Curling Championships 2021
Lillehammer Youth Hall
B-Division Men

Round Robin Session 10
Group A - Sheet L

Game Results

Sheet	Game	Team	LSFE	1	2	3	4	5	6	7	8	9	10	Extra Ends				Total
L	4	FRA - France		0	3	0	0	0	0	0	0	0	X					3
	3	ENG - England	*	1	0	1	2	0	1	1	1	1	X					8

FRA - France		
4	V	MORARD Quentin
3	S	MERCIER Eddy
2		TUAZ Leo
1		GAUDIN Killian
A		VALVASSORI Yannick

ENG - England		
4	S	WOOLSTON Andrew
3	V	REED Andrew
2		GIBSON Scott
1		WHITTLE James
A		JAEGGI Thomas

Last Stone Draw		Distance
↻	GAUDIN Killian	199.6cm
↺	TUAZ Leo	43.6cm
Total		**243.2cm**

Last Stone Draw		Distance
↻	REED Andrew	23.4cm
↺	WOOLSTON Andrew	34.5cm
Total		**57.9cm**

Note:
Position and function for each team member:
4 = Fourth, **3** = Third, **2** = Second, **1** = Lead, **A** = Alternate, **S** = Skip, **V** = Vice-Skip

Legend:
↻ Clockwise ↺ Counter-clockwise **LSFE(*)** Last Stone First End
X Unplayed/unfinished end due to concession

Session Results and Standings

Sheet	Game	Team	LSFE	1	2	3	4	5	6	7	8	9	10	Extra Ends				Total
H	3	SLO - Slovenia	*	2	1	0	2	1	0	0	0	0	2					8
	3	BUL - Bulgaria		0	0	2	0	0	0	1	1	1	0					5

Current Standings

Group A

Rank	Team	Games	Wins	Losses
1	ENG - England	2	2	0
2	TUR - Turkey	3	2	1
2	WAL - Wales	3	2	1
4	AUT - Austria	2	1	1
5	BUL - Bulgaria	3	1	2
5	FRA - France	3	1	2
5	SLO - Slovenia	3	1	2
5	SVK - Slovakia	3	1	2

Group B

Rank	Team	Games	Wins	Losses
1	ESP - Spain	3	3	0
1	RUS - Russia	3	3	0
3	EST - Estonia	3	2	1
4	BLR - Belarus	3	1	2
4	HUN - Hungary	3	1	2
4	LAT - Latvia	3	1	2
4	LTU - Lithuania	3	1	2
8	BEL - Belgium	3	0	3

Note:
Under WCF rules, tie-breaking rules for standings are not applied until after the last game of the round robin.

Legend:
LSFE(*) Last Stone First End

ECC 2021
Lillehammer, Norway

MON 22 NOV 2021
Start Time 16:00

Le Gruyère AOP European Curling Championships 2021
Lillehammer Youth Hall
B-Division Men

Round Robin Session 9
Group A - Sheet H

Game Results

Sheet	Game	Team	LSFE	1	2	3	4	5	6	7	8	9	10	Extra Ends				Total
H	3	SLO - Slovenia	*	2	1	0	2	1	0	0	0	0	2					8
	3	BUL - Bulgaria		0	0	2	0	0	0	1	1	1	0					5

SLO - Slovenia		
4	S	CULIC Jure
3		URSIC Gasper
2		LAJOVEC Jost
1	V	VERBINC Gregor
A		TISLER Tomas

BUL - Bulgaria		
4	S	SEILER Reto
3		MOMERIN Bojidar
2	V	GEORGIEV Stoil
1		PETROV Stanimir
A		RUNTOV Nikolay

Last Stone Draw		Distance
↻	CULIC Jure	13.0cm
↺	URSIC Gasper	101.7cm
Total		**114.7cm**

Last Stone Draw		Distance
↻	MOMERIN Bojidar	199.6cm
↺	SEILER Reto	199.6cm
Total		**399.2cm**

Note:
Position and function for each team member:
4 = Fourth, **3** = Third, **2** = Second, **1** = Lead, **A** = Alternate, **S** = Skip, **V** = Vice-Skip

Legend:
↻ Clockwise ↺ Counter-clockwise **LSFE(*)** Last Stone First End

ECC 2021
Lillehammer, Norway

MON 22 NOV 2021
Start Time 12:00

Le Gruyère AOP European Curling Championships 2021
Lillehammer Youth Hall
B-Division Men

Round Robin Session 8

Session Results and Standings

Sheet	Game	Team	LSFE	1	2	3	4	5	6	7	8	9	10	Extra Ends				Total
F	3	TUR - Turkey		0	0	2	2	0	0	2	1	2	1					10
	3	WAL - Wales	*	2	2	0	0	1	2	0	0	0	0					7
G	3	RUS - Russia	*	0	2	2	0	2	0	1	0	1	X					8
	3	LAT - Latvia		0	0	0	1	0	2	0	1	0	X					4
H	3	HUN - Hungary	*	0	0	1	0	3	0	1	0	1	0					6
	3	ESP - Spain		0	0	0	2	0	3	0	1	0	1					7
J	3	BLR - Belarus	*	2	0	0	0	3	0	2	1	0	X					8
	3	LTU - Lithuania		0	0	0	2	0	2	0	0	1	X					5
K	3	FRA - France	*	0	3	0	0	2	0	1	0	0	X					6
	3	SVK - Slovakia		0	0	1	1	0	1	0	0	1	X					4
L	3	BEL - Belgium	*	2	0	2	0	0	0	1	0	0	1	0				6
	3	EST - Estonia		0	1	0	1	2	1	0	1	0	0	3				9

Current Standings

Group A

Rank	Team	Games	Wins	Losses
1	ENG - England	2	2	0
2	TUR - Turkey	3	2	1
2	WAL - Wales	3	2	1
4	AUT - Austria	2	1	1
4	BUL - Bulgaria	2	1	1
6	FRA - France	3	1	2
6	SVK - Slovakia	3	1	2
8	SLO - Slovenia	2	0	2

Group B

Rank	Team	Games	Wins	Losses
1	ESP - Spain	3	3	0
1	RUS - Russia	3	3	0
3	EST - Estonia	3	2	1
4	BLR - Belarus	3	1	2
4	HUN - Hungary	3	1	2
4	LAT - Latvia	3	1	2
4	LTU - Lithuania	3	1	2
8	BEL - Belgium	3	0	3

Note:
Under WCF rules, tie-breaking rules for standings are not applied until after the last game of the round robin.

Legend:
LSFE(*) Last Stone First End **X** Unplayed/unfinished end due to concession

ECC 2021
Lillehammer, Norway

MON 22 NOV 2021
Start Time 12:00

Le Gruyère AOP European Curling Championships 2021
Lillehammer Youth Hall
B-Division Men

Round Robin Session 8
Group A - Sheet F

Game Results

Sheet	Game	Team	LSFE	1	2	3	4	5	6	7	8	9	10	Extra Ends				Total
F	3	TUR - Turkey		0	0	2	2	0	0	2	1	2	1					10
	3	WAL - Wales	*	2	2	0	0	1	2	0	0	0	0					7

TUR - Turkey		
4	S	KARAGOZ Ugurcan
3	V	KARAKURT Oguzhan
2		UCAN Muhammed Zeki
1		DEMIREL Muhammet Haydar
A		YUCE Orhun

WAL - Wales		
4	S	POUGHER James
3		PHILLIPS Rhys
2	V	COOMBS Garry
1		POUGHER Simon
A		LLOYD Martin

Last Stone Draw		Distance
↻	UCAN Muhammed Zeki	12.7cm
↺	KARAGOZ Ugurcan	187.1cm
Total		**199.8cm**

Last Stone Draw		Distance
↻	POUGHER James	93.6cm
↺	POUGHER Simon	46.9cm
Total		**140.5cm**

Note:
Position and function for each team member:
4 = Fourth, **3** = Third, **2** = Second, **1** = Lead, **A** = Alternate, **S** = Skip, **V** = Vice-Skip

Legend:
↻ Clockwise ↺ Counter-clockwise **LSFE(*)** Last Stone First End

ECC 2021
Lillehammer, Norway

MON 22 NOV 2021
Start Time 12:00

Le Gruyère AOP European Curling Championships 2021
Lillehammer Youth Hall
B-Division Men

Round Robin Session 8
Group B - Sheet G

Game Results

Sheet	Game	Team	LSFE	1	2	3	4	5	6	7	8	9	10	Extra Ends				Total
G	3	RUS - Russia	*	0	2	2	0	2	0	1	0	1	X					8
	3	LAT - Latvia		0	0	0	1	0	2	0	1	0	X					4

RUS - Russia		
4	S	GLUKHOV Sergey
3		KLIMOV Evgenii
2	V	MIRONOV Dmitrii
1		KALALB Anton
A		GORYACHEV Daniil

LAT - Latvia		
4	S	TRUKSANS Martins
3	V	KLIVE Janis
2		AVOTINS Aivars
1		BUHOLCS Sandris
A		BUNCIS Roberts Reinis

Last Stone Draw		Distance
↻	KLIMOV Evgenii	50.8cm
↺	MIRONOV Dmitrii	96.5cm
Total		**147.3cm**

Last Stone Draw		Distance
↻	AVOTINS Aivars	136.8cm
↺	TRUKSANS Martins	46.7cm
Total		**183.5cm**

Note:
Position and function for each team member:
4 = Fourth, **3** = Third, **2** = Second, **1** = Lead, **A** = Alternate, **S** = Skip, **V** = Vice-Skip

Legend:
↻ Clockwise ↺ Counter-clockwise **LSFE(*)** Last Stone First End
X Unplayed/unfinished end due to concession

ECC 2021
Lillehammer, Norway

MON 22 NOV 2021
Start Time 12:00

Le Gruyère AOP European Curling Championships 2021
Lillehammer Youth Hall
B-Division Men

Round Robin Session 8
Group B - Sheet H

Game Results

Sheet	Game	Team	LSFE	1	2	3	4	5	6	7	8	9	10	Extra Ends				Total
H	3	HUN - Hungary	*	0	0	1	0	3	0	1	0	1	0					6
	3	ESP - Spain		0	0	0	2	0	3	0	1	0	1					7

HUN - Hungary		
4		FOTI Balazs
3	S	EZSOL Gabor
2	V	SZABAD Tamas
1		VARGA Balazs
A		VASPORI Tamas

ESP - Spain		
4	S	VEZ Sergio
3		GOMEZ Luis
2		DE PAZ Eduardo
1	V	SHAW Nicholas
A		GARCIA Angel

Last Stone Draw		Distance
↻	FOTI Balazs	16.5cm
↺	VARGA Balazs	11.8cm
Total		**28.3cm**

Last Stone Draw		Distance
↻	VEZ Sergio	23.7cm
↺	SHAW Nicholas	93.1cm
Total		**116.8cm**

Note:
Position and function for each team member:
4 = Fourth, **3** = Third, **2** = Second, **1** = Lead, **A** = Alternate, **S** = Skip, **V** = Vice-Skip

Legend:
↻ Clockwise ↺ Counter-clockwise **LSFE(*)** Last Stone First End

ECC 2021
Lillehammer, Norway

MON 22 NOV 2021
Start Time 12:00

Le Gruyère AOP European Curling Championships 2021
Lillehammer Youth Hall
B-Division Men

Round Robin Session 8
Group B - Sheet J

Game Results

Sheet	Game	Team	LSFE	1	2	3	4	5	6	7	8	9	10	Extra Ends				Total
J	3	BLR - Belarus	*	2	0	0	0	3	0	2	1	0	X					8
	3	LTU - Lithuania		0	0	0	2	0	2	0	0	1	X					5

BLR - Belarus		
4	S	BARKAN Dmitriy
3		RUDNITSKI Dzmitry
2	V	KRYSHTOPA Mikalai
1		CHUBAROV Aleksej
A		-

LTU - Lithuania		
4	S	RYKOV Konstantin
3	V	SKROLIS Arunas
2		KAMARAUSKAS Paulius
1		KIUDYS Donatas
A		IVANAUSKAS Nedas

Last Stone Draw		Distance
↻	BARKAN Dmitriy	32.1cm
↺	RUDNITSKI Dzmitry	55.2cm
Total		**87.3cm**

Last Stone Draw		Distance
↻	KIUDYS Donatas	199.6cm
↺	RYKOV Konstantin	45.9cm
Total		**245.5cm**

Note:
Position and function for each team member:
4 = Fourth, **3** = Third, **2** = Second, **1** = Lead, **A** = Alternate, **S** = Skip, **V** = Vice-Skip

Legend:
↻ Clockwise ↺ Counter-clockwise **LSFE(*)** Last Stone First End
X Unplayed/unfinished end due to concession

ECC 2021
Lillehammer, Norway

MON 22 NOV 2021
Start Time 12:00

Le Gruyère AOP European Curling Championships 2021
Lillehammer Youth Hall
B-Division Men

Round Robin Session 8
Group A - Sheet K

Game Results

Sheet	Game	Team	LSFE	1	2	3	4	5	6	7	8	9	10	Extra Ends				Total
K	3	FRA - France	*	0	3	0	0	2	0	1	0	0	X					6
	3	SVK - Slovakia		0	0	1	1	0	1	0	0	1	X					4

FRA - France		
4	V	MORARD Quentin
3	S	MERCIER Eddy
2		TUAZ Leo
1		GAUDIN Killian
A		VALVASSORI Yannick

SVK - Slovakia		
4	V	KAPRALIK Patrik
3		POLAK Jakub
2	S	GALLO Juraj
1		PITONAK Peter
A		MASARYK Robert

Last Stone Draw		Distance
↻	MORARD Quentin	18.6cm
↺	MERCIER Eddy	19.0cm
Total		**37.6cm**

Last Stone Draw		Distance
↻	POLAK Jakub	115.7cm
↺	KAPRALIK Patrik	199.6cm
Total		**315.3cm**

Note:
Position and function for each team member:
4 = Fourth, **3** = Third, **2** = Second, **1** = Lead, **A** = Alternate, **S** = Skip, **V** = Vice-Skip

Legend:
↻ Clockwise ↺ Counter-clockwise **LSFE(*)** Last Stone First End
X Unplayed/unfinished end due to concession

ECC 2021
Lillehammer, Norway

MON 22 NOV 2021
Start Time 12:00

Le Gruyère AOP European Curling Championships 2021
Lillehammer Youth Hall
B-Division Men

Round Robin Session 8
Group B - Sheet L

Game Results

Sheet	Game	Team	LSFE	1	2	3	4	5	6	7	8	9	10	Extra Ends			Total
L	3	BEL - Belgium	*	2	0	2	0	0	0	1	0	0	1	0			6
	3	EST - Estonia		0	1	0	1	2	1	0	1	0	0	3			9

BEL - Belgium		
4	V	SPRUYT Jeroen
3	S	VERREYCKEN Timo
2		YSKOUT Daan
1		VAN LOOY Bram
A		-

EST - Estonia		
4	V	VLASSOV Mihhail
3	S	VELTSMAN Eduard
2		KIZIRIDI Janis
1		DZENZELJUK Igor
A		DOTSENKO Konstantin

Last Stone Draw		Distance
↻	SPRUYT Jeroen	48.1cm
↺	VAN LOOY Bram	184.5cm
Total		**232.6cm**

Last Stone Draw		Distance
↻	VLASSOV Mihhail	199.6cm
↺	VELTSMAN Eduard	67.7cm
Total		**267.3cm**

Note:
Position and function for each team member:
4 = Fourth, **3** = Third, **2** = Second, **1** = Lead, **A** = Alternate, **S** = Skip, **V** = Vice-Skip

Legend:
↻ Clockwise ↺ Counter-clockwise **LSFE(*)** Last Stone First End

Session Results and Standings

Sheet	Game	Team	LSFE	1	2	3	4	5	6	7	8	9	10	Extra Ends				Total
F	2	BLR - Belarus		0	0	0	0	2	0	1	0	1	X					4
	2	RUS - Russia	*	0	3	3	1	0	2	0	1	0	X					10
H	2	LTU - Lithuania	*	0	1	1	0	2	1	0	0	1	2					8
	2	LAT - Latvia		1	0	0	1	0	0	1	1	0	0					4

Current Standings

Group A

Rank	Team	Games	Wins	Losses
1	ENG - England	2	2	0
1	WAL - Wales	2	2	0
3	AUT - Austria	2	1	1
3	BUL - Bulgaria	2	1	1
3	SVK - Slovakia	2	1	1
3	TUR - Turkey	2	1	1
7	FRA - France	2	0	2
7	SLO - Slovenia	2	0	2

Group B

Rank	Team	Games	Wins	Losses
1	ESP - Spain	2	2	0
1	RUS - Russia	2	2	0
3	EST - Estonia	2	1	1
3	HUN - Hungary	2	1	1
3	LAT - Latvia	2	1	1
3	LTU - Lithuania	2	1	1
7	BEL - Belgium	2	0	2
7	BLR - Belarus	2	0	2

Note:
Under WCF rules, tie-breaking rules for standings are not applied until after the last game of the round robin.

Legend:
LSFE(*) Last Stone First End **X** Unplayed/unfinished end due to concession

ECC 2021
Lillehammer, Norway

SUN 21 NOV 2021
Start Time 19:00

Le Gruyère AOP European Curling Championships 2021
Lillehammer Youth Hall
B-Division Men

Round Robin Session 6
Group B - Sheet F

Game Results

Sheet	Game	Team	LSFE	1	2	3	4	5	6	7	8	9	10	Extra Ends				Total
F	2	BLR - Belarus		0	0	0	0	2	0	1	0	1	X					4
	2	RUS - Russia	*	0	3	3	1	0	2	0	1	0	X					10

BLR - Belarus		
4	S	BARKAN Dmitriy
3		RUDNITSKI Dzmitry
2	V	KRYSHTOPA Mikalai
1		CHUBAROV Aleksej
A		-

RUS - Russia		
4	S	GLUKHOV Sergey
3		KLIMOV Evgenii
2	V	MIRONOV Dmitrii
1		KALALB Anton
A		GORYACHEV Daniil

Last Stone Draw		Distance
↻	CHUBAROV Aleksej	36.0cm
↺	KRYSHTOPA Mikalai	199.6cm
Total		**235.6cm**

Last Stone Draw		Distance
↻	KALALB Anton	13.0cm
↺	GLUKHOV Sergey	45.8cm
Total		**58.8cm**

Note:
Position and function for each team member:
4 = Fourth, **3** = Third, **2** = Second, **1** = Lead, **A** = Alternate, **S** = Skip, **V** = Vice-Skip

Legend:
↻ Clockwise ↺ Counter-clockwise **LSFE(*)** Last Stone First End
X Unplayed/unfinished end due to concession

ECC 2021
Lillehammer, Norway

SUN 21 NOV 2021
Start Time 19:00

Le Gruyère AOP European Curling Championships 2021
Lillehammer Youth Hall
B-Division Men

Round Robin Session 6
Group B - Sheet H

Game Results

Sheet	Game	Team	LSFE	1	2	3	4	5	6	7	8	9	10	Extra Ends				Total
H	2	LTU - Lithuania	*	0	1	1	0	2	1	0	0	1	2					8
	2	LAT - Latvia		1	0	0	1	0	0	1	1	0	0					4

LTU - Lithuania		
4	S	RYKOV Konstantin
3	V	SKROLIS Arunas
2		KAMARAUSKAS Paulius
1		KIUDYS Donatas
A		IVANAUSKAS Nedas

LAT - Latvia		
4	S	TRUKSANS Martins
3	V	KLIVE Janis
2		AVOTINS Aivars
1		BUHOLCS Sandris
A		BUNCIS Roberts Reinis

Last Stone Draw		Distance
↻	SKROLIS Arunas	99.2cm
↺	KAMARAUSKAS Paulius	37.9cm
Total		**137.1cm**

Last Stone Draw		Distance
↻	KLIVE Janis	153.0cm
↺	BUHOLCS Sandris	35.5cm
Total		**188.5cm**

Note:
Position and function for each team member:
4 = Fourth, **3** = Third, **2** = Second, **1** = Lead, **A** = Alternate, **S** = Skip, **V** = Vice-Skip

Legend:
↻ Clockwise ↺ Counter-clockwise **LSFE(*)** Last Stone First End

LE GRUYÈRE SWITZERLAND
LGT Private Banking
MOUNT10
BAUHAUS
CURLIT Curling Information Technology Ltd.

ECC 2021
Lillehammer, Norway

SUN 21 NOV 2021
Start Time 9:00

Le Gruyère AOP European Curling Championships 2021
Lillehammer Youth Hall
B-Division Men

Round Robin Session 4

Session Results and Standings

Sheet	Game	Team	LSFE	1	2	3	4	5	6	7	8	9	10	Extra Ends				Total
F	2	EST - Estonia	*	0	3	0	1	0	0	3	2	X	X					9
	2	HUN - Hungary		0	0	1	0	1	0	0	0	X	X					2
G	2	AUT - Austria	*	2	0	0	0	1	0	0	0	0	1					4
	2	FRA - France		0	0	0	1	0	0	1	1	0	0					3
H	2	BUL - Bulgaria		0	0	1	1	0	1	0	1	1	1					6
	2	SVK - Slovakia	*	0	0	0	0	1	0	3	0	0	0					4
J	2	TUR - Turkey	*	1	0	1	0	2	0	0	2	0	0					6
	2	ENG - England		0	1	0	2	0	1	1	0	1	1					7
K	2	WAL - Wales	*	2	0	0	0	2	1	1	3	X	X					9
	2	SLO - Slovenia		0	1	0	0	0	0	0	0	X	X					1
L	2	ESP - Spain	*	0	2	0	2	0	3	0	0	X	X					7
	2	BEL - Belgium		0	0	1	0	0	0	1	1	X	X					3

Current Standings

Group A

Rank	Team	Games	Wins	Losses
1	ENG - England	2	2	0
1	WAL - Wales	2	2	0
3	AUT - Austria	2	1	1
3	BUL - Bulgaria	2	1	1
3	SVK - Slovakia	2	1	1
3	TUR - Turkey	2	1	1
7	FRA - France	2	0	2
7	SLO - Slovenia	2	0	2

Group B

Rank	Team	Games	Wins	Losses
1	ESP - Spain	2	2	0
2	LAT - Latvia	1	1	0
2	RUS - Russia	1	1	0
4	EST - Estonia	2	1	1
4	HUN - Hungary	2	1	1
6	BLR - Belarus	1	0	1
6	LTU - Lithuania	1	0	1
8	BEL - Belgium	2	0	2

Note:
Under WCF rules, tie-breaking rules for standings are not applied until after the last game of the round robin.

Legend:
LSFE(*) Last Stone First End **X** Unplayed/unfinished end due to concession

ECC 2021
Lillehammer, Norway

SUN 21 NOV 2021
Start Time 9:00

Le Gruyère AOP European Curling Championships 2021
Lillehammer Youth Hall
B-Division Men

Round Robin Session 4
Group B - Sheet F

Game Results

Sheet	Game	Team	LSFE	1	2	3	4	5	6	7	8	9	10	Extra Ends			Total
F	2	EST - Estonia	*	0	3	0	1	0	0	3	2	X	X				9
	2	HUN - Hungary		0	0	1	0	1	0	0	0	X	X				2

EST - Estonia		
4	V	VLASSOV Mihhail
3	S	VELTSMAN Eduard
2		KIZIRIDI Janis
1		DZENZELJUK Igor
A		DOTSENKO Konstantin

HUN - Hungary		
4		FOTI Balazs
3	S	EZSOL Gabor
2	V	SZABAD Tamas
1		VARGA Balazs
A		VASPORI Tamas

Last Stone Draw		Distance
↻	KIZIRIDI Janis	24.3cm
↺	DZENZELJUK Igor	45.8cm
Total		**70.1cm**

Last Stone Draw		Distance
↻	VARGA Balazs	30.4cm
↺	FOTI Balazs	78.3cm
Total		**108.7cm**

Note:
Position and function for each team member:
4 = Fourth, **3** = Third, **2** = Second, **1** = Lead, **A** = Alternate, **S** = Skip, **V** = Vice-Skip

Legend:
↻ Clockwise ↺ Counter-clockwise **LSFE(*)** Last Stone First End
X Unplayed/unfinished end due to concession

ECC 2021
Lillehammer, Norway

SUN 21 NOV 2021
Start Time 9:00

Le Gruyère AOP European Curling Championships 2021
Lillehammer Youth Hall
B-Division Men

Round Robin Session 4
Group A - Sheet G

Game Results

Sheet	Game	Team	LSFE	1	2	3	4	5	6	7	8	9	10	Extra Ends				Total
G	2	AUT - Austria	*	2	0	0	0	1	0	0	0	0	1					4
	2	FRA - France		0	0	0	1	0	0	1	1	0	0					3

AUT - Austria		
4	S	GENNER Mathias
3	V	BACKOFEN Jonas
2		REICHEL Martin
1		KIRCHMAIR Lukas
A		HOFER Matthaeus

FRA - France		
4	V	MORARD Quentin
3	S	MERCIER Eddy
2		TUAZ Leo
1		GAUDIN Killian
A		VALVASSORI Yannick

Last Stone Draw		Distance
↻	BACKOFEN Jonas	60.7cm
↺	REICHEL Martin	6.0cm
Total		**66.7cm**

Last Stone Draw		Distance
↻	TUAZ Leo	47.6cm
↺	GAUDIN Killian	27.3cm
Total		**74.9cm**

Note:
Position and function for each team member:
4 = Fourth, **3** = Third, **2** = Second, **1** = Lead, **A** = Alternate, **S** = Skip, **V** = Vice-Skip

Legend:
↻ Clockwise ↺ Counter-clockwise **LSFE(*)** Last Stone First End

ECC 2021
Lillehammer, Norway

SUN 21 NOV 2021
Start Time 9:00

Le Gruyère AOP European Curling Championships 2021
Lillehammer Youth Hall
B-Division Men

Round Robin Session 4
Group A - Sheet H

Game Results

Sheet	Game	Team	LSFE	1	2	3	4	5	6	7	8	9	10	Extra Ends				Total
H	2	BUL - Bulgaria		0	0	1	1	0	1	0	1	1	1					6
	2	SVK - Slovakia	*	0	0	0	0	1	0	3	0	0	0					4

BUL - Bulgaria		
4	S	SEILER Reto
3		MOMERIN Bojidar
2	V	GEORGIEV Stoil
1		PETROV Stanimir
A		RUNTOV Nikolay

SVK - Slovakia		
4	V	KAPRALIK Patrik
3		POLAK Jakub
2	S	GALLO Juraj
1		PITONAK Peter
A		MASARYK Robert

Last Stone Draw		Distance
↻	PETROV Stanimir	199.6cm
↺	GEORGIEV Stoil	5.5cm
Total		**205.1cm**

Last Stone Draw		Distance
↻	GALLO Juraj	89.1cm
↺	PITONAK Peter	33.4cm
Total		**122.5cm**

Note:
Position and function for each team member:
4 = Fourth, **3** = Third, **2** = Second, **1** = Lead, **A** = Alternate, **S** = Skip, **V** = Vice-Skip

Legend:
↻ Clockwise ↺ Counter-clockwise **LSFE(*)** Last Stone First End

ECC 2021
Lillehammer, Norway

SUN 21 NOV 2021
Start Time 9:00

Le Gruyère AOP European Curling Championships 2021
Lillehammer Youth Hall
B-Division Men

Round Robin Session 4
Group A - Sheet J

Game Results

Sheet	Game	Team	LSFE	1	2	3	4	5	6	7	8	9	10	Extra Ends				Total
J	2	TUR - Turkey	*	1	0	1	0	2	0	0	2	0	0					6
	2	ENG - England		0	1	0	2	0	1	1	0	1	1					7

TUR - Turkey		
4	S	KARAGOZ Ugurcan
3	V	KARAKURT Oguzhan
2		UCAN Muhammed Zeki
1		YUCE Orhun
A		DEMIREL Muhammet Haydar

Last Stone Draw		Distance
↻	KARAKURT Oguzhan	8.7cm
↺	YUCE Orhun	48.6cm
Total		**57.3cm**

ENG - England		
4	S	WOOLSTON Andrew
3	V	REED Andrew
2		GIBSON Scott
1		WHITTLE James
A		JAEGGI Thomas

Last Stone Draw		Distance
↻	GIBSON Scott	23.5cm
↺	WHITTLE James	51.1cm
Total		**74.6cm**

Note:
Position and function for each team member:
4 = Fourth, **3** = Third, **2** = Second, **1** = Lead, **A** = Alternate, **S** = Skip, **V** = Vice-Skip

Legend:
↻ Clockwise ↺ Counter-clockwise **LSFE(*)** Last Stone First End

LE GRUYÈRE SWITZERLAND
LGT Private Banking
MOUNT10
BAUHAUS
CURLIT Curling Information Technology Ltd.

ECC 2021
Lillehammer, Norway

SUN 21 NOV 2021
Start Time 9:00

Le Gruyère AOP European Curling Championships 2021
Lillehammer Youth Hall
B-Division Men

Round Robin Session 4
Group A - Sheet K

Game Results

Sheet	Game	Team	LSFE	1	2	3	4	5	6	7	8	9	10	Extra Ends			Total
K	2	WAL - Wales	*	2	0	0	0	2	1	1	3	X	X				9
	2	SLO - Slovenia		0	1	0	0	0	0	0	0	X	X				1

WAL - Wales		
4	S	POUGHER James
3		PHILLIPS Rhys
2	V	COOMBS Garry
1		POUGHER Simon
A		LLOYD Martin

SLO - Slovenia		
4	S	CULIC Jure
3		URSIC Gasper
2		LAJOVEC Jost
1	V	VERBINC Gregor
A		TISLER Tomas

Last Stone Draw		Distance
↻	COOMBS Garry	31.3cm
↺	PHILLIPS Rhys	96.8cm
Total		**128.1cm**

Last Stone Draw		Distance
↻	LAJOVEC Jost	25.9cm
↺	VERBINC Gregor	112.1cm
Total		**138.0cm**

Note:
Position and function for each team member:
4 = Fourth, **3** = Third, **2** = Second, **1** = Lead, **A** = Alternate, **S** = Skip, **V** = Vice-Skip

Legend:
↻ Clockwise ↺ Counter-clockwise **LSFE(*)** Last Stone First End
X Unplayed/unfinished end due to concession

ECC 2021
Lillehammer, Norway

SUN 21 NOV 2021
Start Time 9:00

Le Gruyère AOP European Curling Championships 2021
Lillehammer Youth Hall
B-Division Men

Round Robin Session 4
Group B - Sheet L

Game Results

Sheet	Game	Team	LSFE	1	2	3	4	5	6	7	8	9	10	Extra Ends				Total
L	2	ESP - Spain	*	0	2	0	2	0	3	0	0	X	X					7
	2	BEL - Belgium		0	0	1	0	0	0	1	1	X	X					3

ESP - Spain		
4	S	VEZ Sergio
3		GOMEZ Luis
2		DE PAZ Eduardo
1	V	SHAW Nicholas
A		GARCIA Angel

BEL - Belgium		
4	V	SPRUYT Jeroen
3	S	VERREYCKEN Timo
2		YSKOUT Daan
1		VAN LOOY Bram
A		-

Last Stone Draw		Distance
↻	GOMEZ Luis	100.5cm
↺	DE PAZ Eduardo	15.2cm
Total		**115.7cm**

Last Stone Draw		Distance
↻	VERREYCKEN Timo	126.0cm
↺	YSKOUT Daan	138.1cm
Total		**264.1cm**

Note:
Position and function for each team member:
4 = Fourth, **3** = Third, **2** = Second, **1** = Lead, **A** = Alternate, **S** = Skip, **V** = Vice-Skip

Legend:
↻ Clockwise ↺ Counter-clockwise **LSFE(*)** Last Stone First End
X Unplayed/unfinished end due to concession

Session Results and Standings

Sheet	Game	Team	LSFE	1	2	3	4	5	6	7	8	9	10	Extra Ends				Total
L	1	LTU - Lithuania		0	0	0	1	0	1	0	X	X	X					2
	1	RUS - Russia	*	3	1	0	0	2	0	2	X	X	X					8

Current Standings

Group A

Rank	Team	Games	Wins	Losses
1	ENG - England	1	1	0
1	SVK - Slovakia	1	1	0
1	TUR - Turkey	1	1	0
1	WAL - Wales	1	1	0
5	AUT - Austria	1	0	1
5	BUL - Bulgaria	1	0	1
5	FRA - France	1	0	1
5	SLO - Slovenia	1	0	1

Group B

Rank	Team	Games	Wins	Losses
1	ESP - Spain	1	1	0
1	HUN - Hungary	1	1	0
1	LAT - Latvia	1	1	0
1	RUS - Russia	1	1	0
5	BEL - Belgium	1	0	1
5	BLR - Belarus	1	0	1
5	EST - Estonia	1	0	1
5	LTU - Lithuania	1	0	1

Note:
Under WCF rules, tie-breaking rules for standings are not applied until after the last game of the round robin.

Legend:
LSFE(*) Last Stone First End **X** Unplayed/unfinished end due to concession

ECC 2021
Lillehammer, Norway

SAT 20 NOV 2021
Start Time 19:00

Le Gruyère AOP European Curling Championships 2021
Lillehammer Youth Hall
B-Division Men

Round Robin Session 3
Group B - Sheet L

Game Results

Sheet	Game	Team	LSFE	1	2	3	4	5	6	7	8	9	10	Extra Ends				Total
L	1	LTU - Lithuania		0	0	0	1	0	1	0	X	X	X					2
	1	RUS - Russia	*	3	1	0	0	2	0	2	X	X	X					8

LTU - Lithuania		
4	S	RYKOV Konstantin
3	V	SKROLIS Arunas
2		KAMARAUSKAS Paulius
1		KIUDYS Donatas
A		IVANAUSKAS Nedas

RUS - Russia		
4	S	GLUKHOV Sergey
3		KLIMOV Evgenii
2	V	MIRONOV Dmitrii
1		KALALB Anton
A		GORYACHEV Daniil

Last Stone Draw		Distance
↻	RYKOV Konstantin	114.7cm
↺	KIUDYS Donatas	13.0cm
Total		**127.7cm**

Last Stone Draw		Distance
↻	GLUKHOV Sergey	33.6cm
↺	KALALB Anton	63.9cm
Total		**97.5cm**

Note:
Position and function for each team member:
4 = Fourth, **3** = Third, **2** = Second, **1** = Lead, **A** = Alternate, **S** = Skip, **V** = Vice-Skip

Legend:
↻ Clockwise ↺ Counter-clockwise **LSFE(*)** Last Stone First End
X Unplayed/unfinished end due to concession

ECC 2021
Lillehammer, Norway

SAT 20 NOV 2021
Start Time 14:00

Le Gruyère AOP European Curling Championships 2021
Lillehammer Youth Hall
B-Division Men

Round Robin Session 2

Session Results and Standings

Sheet	Game	Team	LSFE	1	2	3	4	5	6	7	8	9	10	Extra Ends				Total
F	1	AUT - Austria		0	0	0	2	0	4	0	1	1	0					8
	1	ENG - England	*	1	1	1	0	2	0	3	0	0	1					9
G	1	TUR - Turkey	*	4	0	3	0	1	1	2	X	X	X					11
	1	BUL - Bulgaria		0	0	0	1	0	0	0	X	X	X					1
H	1	FRA - France		0	0	1	0	0	0	0	0	3	0					4
	1	WAL - Wales	*	1	0	0	0	0	0	0	3	0	1					5
J	1	ESP - Spain	*	0	0	2	3	2	0	0	X	X	X					7
	1	EST - Estonia		0	1	0	0	0	0	1	X	X	X					2
K	1	BEL - Belgium		0	0	0	0	0	1	0	1	1	X					3
	1	HUN - Hungary	*	2	0	1	3	0	0	1	0	0	X					7
L	1	LAT - Latvia	*	1	2	1	1	0	0	0	1	0	1					7
	1	BLR - Belarus		0	0	0	0	0	2	1	0	1	0					4

Current Standings

Group A

Rank	Team	Games	Wins	Losses
1	ENG - England	1	1	0
1	SVK - Slovakia	1	1	0
1	TUR - Turkey	1	1	0
1	WAL - Wales	1	1	0
5	AUT - Austria	1	0	1
5	BUL - Bulgaria	1	0	1
5	FRA - France	1	0	1
5	SLO - Slovenia	1	0	1

Group B

Rank	Team	Games	Wins	Losses
1	ESP - Spain	1	1	0
1	HUN - Hungary	1	1	0
1	LAT - Latvia	1	1	0
4	BEL - Belgium	1	0	1
4	BLR - Belarus	1	0	1
4	EST - Estonia	1	0	1
	LTU - Lithuania	0		
	RUS - Russia	0		

Note:
Under WCF rules, tie-breaking rules for standings are not applied until after the last game of the round robin.

Legend:
LSFE(*) Last Stone First End **X** Unplayed/unfinished end due to concession

ECC 2021
Lillehammer, Norway

SAT 20 NOV 2021
Start Time 14:00

Le Gruyère AOP European Curling Championships 2021
Lillehammer Youth Hall
B-Division Men

Round Robin Session 2
Group A - Sheet F

Game Results

Sheet	Game	Team	LSFE	1	2	3	4	5	6	7	8	9	10	Extra Ends				Total
F	1	AUT - Austria		0	0	0	2	0	4	0	1	1	0					8
	1	ENG - England	*	1	1	1	0	2	0	3	0	0	1					9

AUT - Austria		
4	S	GENNER Mathias
3	V	BACKOFEN Jonas
2		REICHEL Martin
1		KIRCHMAIR Lukas
A		HOFER Matthaeus

ENG - England		
4	S	WOOLSTON Andrew
3	V	REED Andrew
2		GIBSON Scott
1		WHITTLE James
A		JAEGGI Thomas

Last Stone Draw		Distance
↻	KIRCHMAIR Lukas	199.6cm
↺	GENNER Mathias	35.3cm
Total		**234.9cm**

Last Stone Draw		Distance
↻	WOOLSTON Andrew	27.6cm
↺	REED Andrew	4.2cm
Total		**31.8cm**

Note:
Position and function for each team member:
4 = Fourth, **3** = Third, **2** = Second, **1** = Lead, **A** = Alternate, **S** = Skip, **V** = Vice-Skip

Legend:
↻ Clockwise ↺ Counter-clockwise **LSFE(*)** Last Stone First End

ECC 2021
Lillehammer, Norway

SAT 20 NOV 2021
Start Time 14:00

Le Gruyère AOP European Curling Championships 2021
Lillehammer Youth Hall
B-Division Men

Round Robin Session 2
Group A - Sheet G

Game Results

Sheet	Game	Team	LSFE	1	2	3	4	5	6	7	8	9	10	Extra Ends				Total
G	1	TUR - Turkey	*	4	0	3	0	1	1	2	X	X	X					11
	1	BUL - Bulgaria		0	0	0	1	0	0	0	X	X	X					1

TUR - Turkey		
4	S	KARAGOZ Ugurcan
3	V	KARAKURT Oguzhan
2		UCAN Muhammed Zeki
1		YUCE Orhun
A		DEMIREL Muhammet Haydar

BUL - Bulgaria		
4	S	SEILER Reto
3		MOMERIN Bojidar
2	V	GEORGIEV Stoil
1		PETROV Stanimir
A		RUNTOV Nikolay

Last Stone Draw		Distance
↻	KARAGOZ Ugurcan	54.6cm
↺	UCAN Muhammed Zeki	70.7cm
Total		**125.3cm**

Last Stone Draw		Distance
↻	SEILER Reto	84.7cm
↺	MOMERIN Bojidar	140.8cm
Total		**225.5cm**

Note:
Position and function for each team member:
4 = Fourth, **3** = Third, **2** = Second, **1** = Lead, **A** = Alternate, **S** = Skip, **V** = Vice-Skip

Legend:
↻ Clockwise ↺ Counter-clockwise **LSFE(*)** Last Stone First End
X Unplayed/unfinished end due to concession

ECC 2021
Lillehammer, Norway

SAT 20 NOV 2021
Start Time 14:00

Le Gruyère AOP European Curling Championships 2021
Lillehammer Youth Hall
B-Division Men

Round Robin Session 2
Group A - Sheet H

Game Results

Sheet	Game	Team	LSFE	1	2	3	4	5	6	7	8	9	10	Extra Ends			Total
H	1	FRA - France		0	0	1	0	0	0	0	0	3	0				4
	1	WAL - Wales	*	1	0	0	0	0	0	0	3	0	1				5

FRA - France		
4	V	MORARD Quentin
3	S	MERCIER Eddy
2		TUAZ Leo
1		GAUDIN Killian
A		VALVASSORI Yannick

WAL - Wales		
4	S	POUGHER James
3		PHILLIPS Rhys
2	V	COOMBS Garry
1		POUGHER Simon
A		LLOYD Martin

Last Stone Draw		Distance
↻	MERCIER Eddy	46.5cm
↺	MORARD Quentin	104.2cm
Total		**150.7cm**

Last Stone Draw		Distance
↻	POUGHER Simon	72.9cm
↺	POUGHER James	74.3cm
Total		**147.2cm**

Note:
Position and function for each team member:
4 = Fourth, **3** = Third, **2** = Second, **1** = Lead, **A** = Alternate, **S** = Skip, **V** = Vice-Skip

Legend:
↻ Clockwise ↺ Counter-clockwise **LSFE(*)** Last Stone First End

LE GRUYÈRE SWITZERLAND
LGT Private Banking
MOUNT10
BAUHAUS
CURLIT Curling Information Technology Ltd.

ECC 2021
Lillehammer, Norway

SAT 20 NOV 2021
Start Time 14:00

Le Gruyère AOP European Curling Championships 2021
Lillehammer Youth Hall
B-Division Men

Round Robin Session 2
Group B - Sheet J

Game Results

Sheet	Game	Team	LSFE	1	2	3	4	5	6	7	8	9	10	Extra Ends				Total
J	1	ESP - Spain	*	0	0	2	3	2	0	0	X	X	X					7
	1	EST - Estonia		0	1	0	0	0	0	1	X	X	X					2

ESP - Spain		
4	S	VEZ Sergio
3		GOMEZ Luis
2		DE PAZ Eduardo
1	V	SHAW Nicholas
A		GARCIA Angel

EST - Estonia		
4	V	VLASSOV Mihhail
3	S	VELTSMAN Eduard
2		KIZIRIDI Janis
1		DZENZELJUK Igor
A		DOTSENKO Konstantin

Last Stone Draw		Distance
↻	VEZ Sergio	35.1cm
↺	SHAW Nicholas	43.7cm
Total		**78.8cm**

Last Stone Draw		Distance
↻	VELTSMAN Eduard	90.8cm
↺	VLASSOV Mihhail	199.6cm
Total		**290.4cm**

Note:
Position and function for each team member:
4 = Fourth, **3** = Third, **2** = Second, **1** = Lead, **A** = Alternate, **S** = Skip, **V** = Vice-Skip

Legend:
↻ Clockwise ↺ Counter-clockwise **LSFE(*)** Last Stone First End
X Unplayed/unfinished end due to concession

ECC 2021
Lillehammer, Norway

SAT 20 NOV 2021
Start Time 14:00

Le Gruyère AOP European Curling Championships 2021
Lillehammer Youth Hall
B-Division Men

Round Robin Session 2
Group B - Sheet K

Game Results

Sheet	Game	Team	LSFE	1	2	3	4	5	6	7	8	9	10	Extra Ends				Total
K	1	BEL - Belgium		0	0	0	0	0	1	0	1	1	X					3
	1	HUN - Hungary	*	2	0	1	3	0	0	1	0	0	X					7

BEL - Belgium		
4	V	SPRUYT Jeroen
3	S	VERREYCKEN Timo
2		YSKOUT Daan
1		VAN LOOY Bram
A		-

HUN - Hungary		
4		FOTI Balazs
3	S	EZSOL Gabor
2	V	SZABAD Tamas
1		VARGA Balazs
A		VASPORI Tamas

Last Stone Draw		Distance
↻	VERREYCKEN Timo	34.3cm
↺	YSKOUT Daan	199.6cm
Total		**233.9cm**

Last Stone Draw		Distance
↻	VARGA Balazs	63.9cm
↺	FOTI Balazs	20.1cm
Total		**84.0cm**

Note:
Position and function for each team member:
4 = Fourth, **3** = Third, **2** = Second, **1** = Lead, **A** = Alternate, **S** = Skip, **V** = Vice-Skip

Legend:
↻ Clockwise ↺ Counter-clockwise **LSFE(*)** Last Stone First End
X Unplayed/unfinished end due to concession

ECC 2021
Lillehammer, Norway

SAT 20 NOV 2021
Start Time 14:00

Le Gruyère AOP European Curling Championships 2021
Lillehammer Youth Hall
B-Division Men

Round Robin Session 2
Group B - Sheet L

Game Results

Sheet	Game	Team	LSFE	1	2	3	4	5	6	7	8	9	10	Extra Ends				Total
L	1	LAT - Latvia	*	1	2	1	1	0	0	0	1	0	1					7
	1	BLR - Belarus		0	0	0	0	0	2	1	0	1	0					4

LAT - Latvia		
4	S	TRUKSANS Martins
3	V	KLIVE Janis
2		AVOTINS Aivars
1		BUHOLCS Sandris
A		BUNCIS Roberts Reinis

Last Stone Draw		Distance
↻	TRUKSANS Martins	90.0cm
↺	AVOTINS Aivars	69.4cm
Total		**159.4cm**

BLR - Belarus		
4	S	BARKAN Dmitriy
3		RUDNITSKI Dzmitry
2	V	KRYSHTOPA Mikalai
1		CHUBAROV Aleksej
A		-

Last Stone Draw		Distance
↻	RUDNITSKI Dzmitry	72.7cm
↺	BARKAN Dmitriy	46.0cm
Total		**118.7cm**

BLR forfeits LSFE (failure to attend the team meeting, rule C2i).

Note:
Position and function for each team member:
4 = Fourth, **3** = Third, **2** = Second, **1** = Lead, **A** = Alternate, **S** = Skip, **V** = Vice-Skip

Legend:
↻ Clockwise ↺ Counter-clockwise **LSFE(*)** Last Stone First End

Session Results and Standings

Sheet	Game	Team	LSFE	1	2	3	4	5	6	7	8	9	10	Extra Ends				Total
F	1	SLO - Slovenia		1	1	0	0	1	0	0	1	0	X					4
	1	SVK - Slovakia	*	0	0	1	1	0	2	1	0	5	X					10

Current Standings

Group A

Rank	Team	Games	Wins	Losses
1	SVK - Slovakia	1	1	0
2	SLO - Slovenia	1	0	1
	AUT - Austria	0		
	BUL - Bulgaria	0		
	ENG - England	0		
	FRA - France	0		
	TUR - Turkey	0		
	WAL - Wales	0		

Group B

Rank	Team	Games	Wins	Losses
	BEL - Belgium			
	BLR - Belarus			
	ESP - Spain			
	EST - Estonia			
	HUN - Hungary			
	LAT - Latvia			
	LTU - Lithuania			
	RUS - Russia			

Note:
Under WCF rules, tie-breaking rules for standings are not applied until after the last game of the round robin.

Legend:
LSFE(*) Last Stone First End **X** Unplayed/unfinished end due to concession

ECC 2021
Lillehammer, Norway

SAT 20 NOV 2021
Start Time 9:00

Le Gruyère AOP European Curling Championships 2021
Lillehammer Youth Hall
B-Division Men

Round Robin Session 1
Group A - Sheet F

Game Results

Sheet	Game	Team	LSFE	1	2	3	4	5	6	7	8	9	10	Extra Ends				Total
F	1	SLO - Slovenia		1	1	0	0	1	0	0	1	0	X					4
	1	SVK - Slovakia	*	0	0	1	1	0	2	1	0	5	X					10

SLO - Slovenia		
4	S	CULIC Jure
3		URSIC Gasper
2		LAJOVEC Jost
1	V	VERBINC Gregor
A		TISLER Tomas

SVK - Slovakia		
4	V	KAPRALIK Patrik
3		POLAK Jakub
2	S	GALLO Juraj
1		PITONAK Peter
A		MASARYK Robert

Last Stone Draw		Distance
↻	URSIC Gasper	53.0cm
↺	CULIC Jure	147.1cm
Total		**200.1cm**

Last Stone Draw		Distance
↻	KAPRALIK Patrik	32.6cm
↺	POLAK Jakub	48.5cm
Total		**81.1cm**

Note:
Position and function for each team member:
4 = Fourth, **3** = Third, **2** = Second, **1** = Lead, **A** = Alternate, **S** = Skip, **V** = Vice-Skip

Legend:
↻ Clockwise ↺ Counter-clockwise **LSFE(*)** Last Stone First End
X Unplayed/unfinished end due to concession

Entry List by Country

As of FRI 19 NOV 2021

AUT - Austria		Group A
4 S	GENNER Mathias	L
3 V	BACKOFEN Jonas	R
2	REICHEL Martin	R
1	KIRCHMAIR Lukas	L
A	HOFER Matthaeus	R
C	SCHROEDER Bjoern (GER)	
2C	WINKLER Andreas	
O	-	

BEL - Belgium		Group B
4 V	SPRUYT Jeroen	R
3 S	VERREYCKEN Timo	R
2	YSKOUT Daan	L
1	VAN LOOY Bram	R
A	-	
C	NEELEMAN Wim (NED)	
T	VERREYCKEN Joris	
O	-	

BLR - Belarus		Group B
4 S	BARKAN Dmitriy	R
3	RUDNITSKI Dzmitry	R
2 V	KRYSHTOPA Mikalai	R
1	CHUBAROV Aleksej	R
A	-	
C	-	
O	-	
O	-	

BUL - Bulgaria		Group A
4 S	SEILER Reto	R
3	MOMERIN Bojidar	R
2 V	GEORGIEV Stoil	R
1	PETROV Stanimir	R
A	RUNTOV Nikolay	R
C	RUNTOV Nikolay	
O	-	
O	-	

ENG - England		Group A
4 S	WOOLSTON Andrew	R
3 V	REED Andrew	R
2	GIBSON Scott	R
1	WHITTLE James	L
A	JAEGGI Thomas	R
C	-	
O	-	
O	-	

ESP - Spain		Group B
4 S	VEZ Sergio	R
3	GOMEZ Luis	R
2	DE PAZ Eduardo	R
1 V	SHAW Nicholas	R
A	GARCIA Angel	R
C	-	
O	-	
O	-	

EST - Estonia		Group B
4 V	VLASSOV Mihhail	R
3 S	VELTSMAN Eduard	L
2	KIZIRIDI Janis	R
1	DZENZELJUK Igor	R
A	DOTSENKO Konstantin	R
C	JAKOVLEV Vladimir (RUS)	
NC	BROWN Derek (SCO)	
O	-	

FRA - France		Group A
4 V	MORARD Quentin	R
3 S	MERCIER Eddy	R
2	TUAZ Leo	R
1	GAUDIN Killian	R
A	VALVASSORI Yannick	R
C	MERCIER Thierry	
O	-	
O	-	

HUN - Hungary		Group B
4	FOTI Balazs	R
3 S	EZSOL Gabor	R
2 V	SZABAD Tamas	R
1	VARGA Balazs	R
A	VASPORI Tamas	R
C	VASPORI Tamas	
O	-	
O	-	

LAT - Latvia		Group B
4 S	TRUKSANS Martins	R
3 V	KLIVE Janis	R
2	AVOTINS Aivars	R
1	BUHOLCS Sandris	R
A	BUNCIS Roberts Reinis	R
C	SMILGA Karlis	
O	-	
O	-	

Entry List by Country

As of FRI 19 NOV 2021

LTU - Lithuania		Group B
4 S	RYKOV Konstantin	R
3 V	SKROLIS Arunas	R
2	KAMARAUSKAS Paulius	R
1	KIUDYS Donatas	R
A	IVANAUSKAS Nedas	R
C	ZALIECKAS Vygantas	
O	-	
O	-	

SVK - Slovakia		Group A
4 V	KAPRALIK Patrik	L
3	POLAK Jakub	R
2 S	GALLO Juraj	R
1	PITONAK Peter	R
A	MASARYK Robert	R
C	-	
O	-	
O	-	

RUS - Russia		Group B
4 S	GLUKHOV Sergey	R
3	KLIMOV Evgenii	R
2 V	MIRONOV Dmitrii	R
1	KALALB Anton	R
A	GORYACHEV Daniil	R
C	KOZYREV Aleksandr	
NC	SHULIKO Yury	
O	SOLOVEV Ilia	

TUR - Turkey		Group A
4 S	KARAGOZ Ugurcan	R
3 V	KARAKURT Oguzhan	R
2	UCAN Muhammed Zeki	R
1	YUCE Orhun	R
A	DEMIREL Muhammet Haydar	R
C	CELIK Ahmet	
O	ERZEYBEK Mustafa Said	
O	CELEBI Ahmet	

SLO - Slovenia		Group A
4 S	CULIC Jure	R
3	URSIC Gasper	R
2	LAJOVEC Jost	R
1 V	VERBINC Gregor	R
A	TISLER Tomas	R
C	-	
O	-	
O	-	

WAL - Wales		Group A
4 S	POUGHER James	L
3	PHILLIPS Rhys	R
2 V	COOMBS Garry	R
1	POUGHER Simon	R
A	LLOYD Martin	R
C	FLETCHER Jamie (CAN)	
O	-	
O	-	

Note:
Position and function for each team member:
4 = Fourth, **3** = Third, **2** = Second, **1** = Lead, **A** = Alternate, **S** = Skip, **V** = Vice-Skip
C = Coach, **2C** = 2nd Team Coach, **NC** = National Coach, **T** = Translator, **O** = Team Official

Legend:
L Left-handed **R** Right-handed

Competition Officials

As of FRI 19 NOV 2021

Function	Name	Organisation
WCF President:	CAITHNESS Kate	SCO - Scotland
WCF Head of Competitions & TD:	ROETHLISBERGER Eeva	SUI - Switzerland
WCF Deputy Technical Delegate:	MUTCH Laura	SCO - Scotland
Chief Umpire:	GOWER Michele	CAN - Canada
Deputy Chief Umpire:	REIMERTZ Joaquim	SWE - Sweden
Game Umpires:	LAURIDSEN Steen	DEN - Denmark
	ORLOV Alexandr	RUS - Russia
	PLUTA Marta	POL - Poland
	SOKOLOVA Evgenia	RUS - Russia
	SYKORA Marek	SVK - Slovakia
Chief Ice Technician:	JOERGENSEN Asmus	DEN - Denmark
Deputy Chief Ice Technician:	MUNRO George	SCO - Scotland

Legend:
TD Technical Delegate

Competition Schedule

As of FRI 19 NOV 2021

Date	Start Time	Session	Sheet F	Sheet G	Sheet H	Sheet J	Sheet K	Sheet L
SAT 20 NOV	9:00	1	SLO - SVK	svk - eng	ltu - nor	hun - fin	slo - lat	esp - aut
	14:00	2	AUT - ENG	TUR - BUL	FRA - WAL	ESP - EST	BEL - HUN	LAT - BLR
	19:00	3	esp - slo	hun - lat	eng - ltu	aut - nor	svk - fin	LTU - RUS
SUN 21 NOV	9:00	4	EST - HUN	AUT - FRA	BUL - SVK	TUR - ENG	WAL - SLO	ESP - BEL
	14:00	5	aut - lat	slo - svk	fin - eng	ltu - hun	nor - esp	
	19:00	6	BLR - RUS	esp - fin	LTU - LAT		lat - ltu	
MON 22 NOV	8:00	7		fin - ltu	aut - svk	nor - slo	esp - hun	lat - eng
	12:00	8	TUR - WAL	RUS - LAT	HUN - ESP	BLR - LTU	FRA - SVK	BEL - EST
	16:00	9	eng - esp	nor - hun	SLO - BUL	svk - lat	fin - aut	ltu - slo
	20:00	10	LAT - BEL	WAL - AUT			RUS - EST	FRA - ENG
TUE 23 NOV	9:00	11	svk - nor	ENG - SVK	hun - aut	slo - eng	TUR - FRA	SLO - AUT
	14:00	12		LTU - BEL	ESP - RUS	LAT - HUN	EST - BLR	BUL - WAL
	19:00	13	ltu - svk	lat - esp	slo - hun	eng - aut	SVK - AUT	fin - nor
WED 24 NOV	9:00	14	BUL - FRA	EST - LTU	BEL - BLR	esp - ltu	ESP - LAT	RUS - HUN
	14:00	15		aut - slo	AUT - TUR	SVK - WAL	eng - nor	ENG - SLO
	19:00	16	LTU - ESP	HUN - BLR	lat - fin			hun - svk
THU 25 NOV	9:00	17	slo - fin	SLO - TUR	WAL - ENG	AUT - BUL		nor - lat
	14:00	18	hun - eng	ltu - aut	svk - esp	BEL - RUS	HUN - LTU	
	19:00	19		BLR - ESP	LAT - EST	FRA - SLO	ENG - BUL	SVK - TUR
FRI 26 NOV	10:00	Men's Qualification and Relegation; Women's Semi-finals						
	18:00	Men's Semi-finals and Relegation						
SAT 27 NOV	11:30	Men's and Women's Finals						

Note:
Lowercase - women UPPERCASE - MEN
First named team in each game plays red-handled stones and wears dark coloured upper playing garments.
Please check online for more details and the latest updates.